STAUFF®

SAE Flanges

Gear Pump Flanges

Catalogue 3

STAUFF Flanges

Introduction	**4 - 11**	
SAE Split Flange Halves / Flange Clamps	**12 - 21**	A
SAE Flange / Counterflange Adaptors	**22 - 37**	B
SAE Single-Part Flanges / Counterflanges	**38 - 79**	C
Accessories for SAE Flanges	**80 - 89**	D
SAE Flange Blocks	**90 - 97**	E
Gear Pump Flanges as per German (Bosch) and Italian standards (Plessey)	**98 - 111**	F
Assembly Instructions	**112 - 117**	G
Appendix (Product-Specific Abbreviations / Global Contact Directory)	**118 - 123**	

Catalogue 1
STAUFF Clamps

- Block Clamps
- Special Clamps
- Light Series Clamps
- Saddle Clamps
- U-Bolt Clamps
- Metal Clamps
- Construction Series

Catalogue 2
STAUFF Connect

- Tube Connectors
- Assembly Tools and Devices

Catalogue 3
STAUFF Flanges

- SAE Flanges
- Gear Pump Flanges

Catalogue 4
STAUFF Hose Connectors

- Hose Connectors
- High-Pressure Hose Connectors

Catalogue 5
STAUFF Quick Release Couplings

- Push-to-Connect Couplings
- Multi Couplings
- Screw-to-Connect Couplings

Catalogue 6
STAUFF Valves

- Two-Way Ball Valves
- Multi-Way Ball Valves
- Flow Control and Check Valves
- Gauge Isolator Valves

Catalogue 7
STAUFF Test

- Test Couplings
- Test Adaptors
- Test Hoses and Connectors

Catalogue 8
STAUFF Diagtronics

- Pressure Gauges
- Hydraulic Testers
- Oil Analysis Equipment

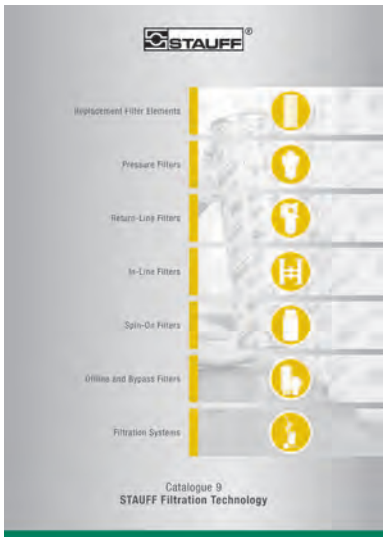

Catalogue 9
STAUFF Filtration Technology

- Replacement Filter Elements
- Pressure Filters
- Return-Line Filters
- In-Line Filters
- Spin-On Filters
- Offline and Bypass Filters
- Filtration Systems

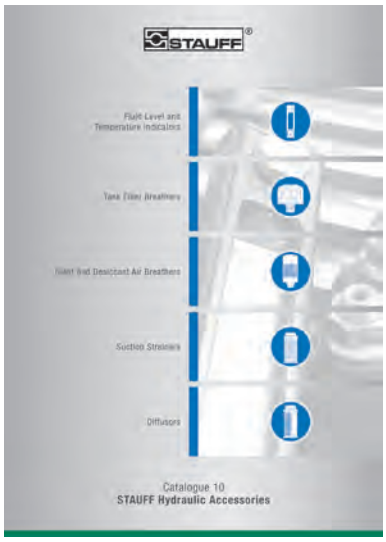

Catalogue 10
STAUFF Hydraulic Accessories

- Fluid Level and Temperature Indicators
- Tank Filler Breathers
- Giant and Desiccant Air Breathers
- Suction Strainers
- Diffusors

For more than 50 years, the companies of STAUFF Group have been developing, manufacturing and distributing pipework equipment and hydraulic components for mechanical and plant engineering and for service and industrial maintenance.

In addition to mobile and industrial hydraulic machinery, typical applications also include commercial and special purpose vehicles, rail transportation and energy technology. Likewise, STAUFF products are used in marine, oil and gas applications and in the process, food and chemical industries.

The overall range currently includes about 50000 standard products as well as numerous special and system solutions according to customer's specifications or based on our in-house development.

All STAUFF products undergo relevant testing in accordance with international regulations and are governed by the high standards of the in-house quality management system. Furthermore, many items have received certifications and approvals from various international institutes, organisations and authorities who have independently confirmed the quality and performance of the products.

Wholly-owned manufacturing, sales and service facilities in 18 countries and a tight global network of authorised distribution partners ensure high presence and service paired with a maximum of availability.

Lloyd's Register LRQA

Quality Management – ISO 9001:2015
Environmental Management – ISO 14001:2015
Safety Management – ISO 45001:2018
Energy Management – ISO 50001:2018

STAUFF LINE Components

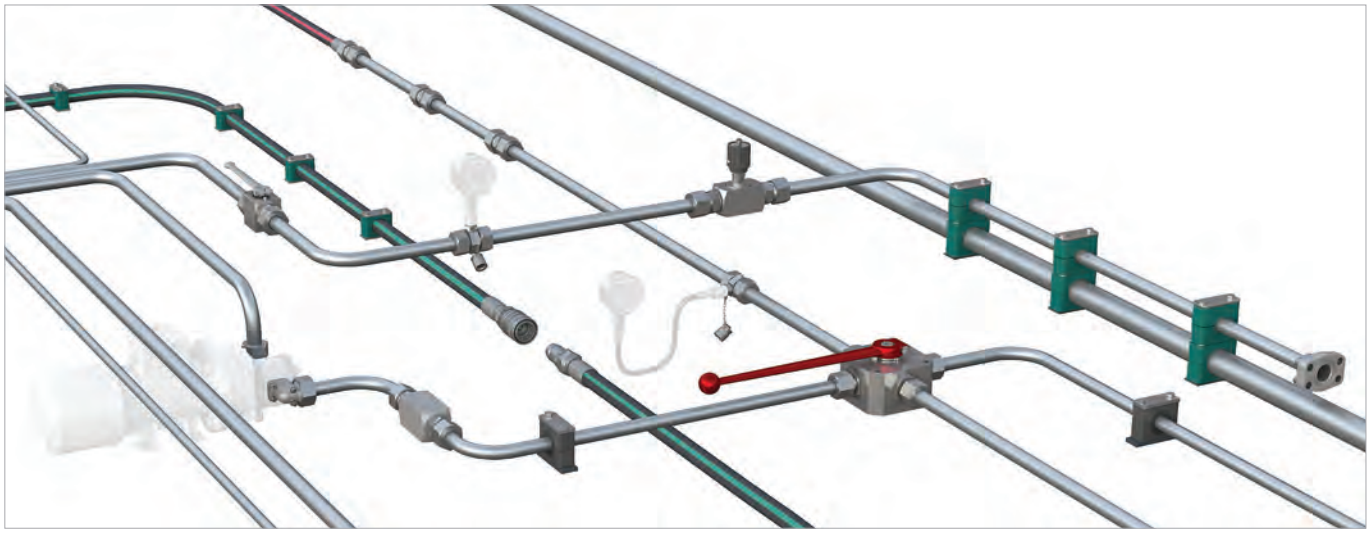

With the seven dedicated **STAUFF Line** product groups

- **STAUFF Clamps**
- **STAUFF Connect**
- **STAUFF Flanges**
- **STAUFF Hose Connectors**
- **STAUFF Quick Release Couplings**
- **STAUFF Valves**
- **STAUFF Test**

from own, in-house development and manufacturing, the companies of the STAUFF Group provide a comprehensive range of components for fastening and connecting pipes, tubes and hoses for mobile and industrial hydraulic applications and many other industries.

The portfolio is completed by components for shutting-off, regulating, throttling and measuring fluid media.

In order to perfectly match each other, STAUFF Line products are designed and offered on a high, uniform level of quality. A large proportion of the range made from steel comes as standard with the premium STAUFF Zinc/Nickel surface coating, which is also optionally available for many of the other components.

This coating offers the most reliable surface protection far beyond the previous market standards – even after transport, handling and assembly of the components – and meets all current legal requirements.

If desired, Original Equipment Manufacturers can be supported with value-added services, from **technical consultation** to **pre-assembly, assembly and kitting** as well as **logistics services**:

- Support with the **selection of suitable standard components** and ordering options; provision of **customised solutions** according to customer's specifications or based on our in-house development – from prototyping to large scale production

- **Analysis and optimization** of existing and design and developments of new systems aimed at increasing the efficiency and performance of machines and equipment and creating value for customers by reducing the total cost

- **Pre-assembly, assembly and kitting** of individual components to customer-specific system modules

- Individually coordinated **procurement solutions** (e.g. web shop and electronic data interchange) and **supply models** (e.g. from warehousing of customised components to Kanban logistics and just-in-time delivery of pre-fabricated system modules to the assembly lines of the customers) aimed at optimising material flows

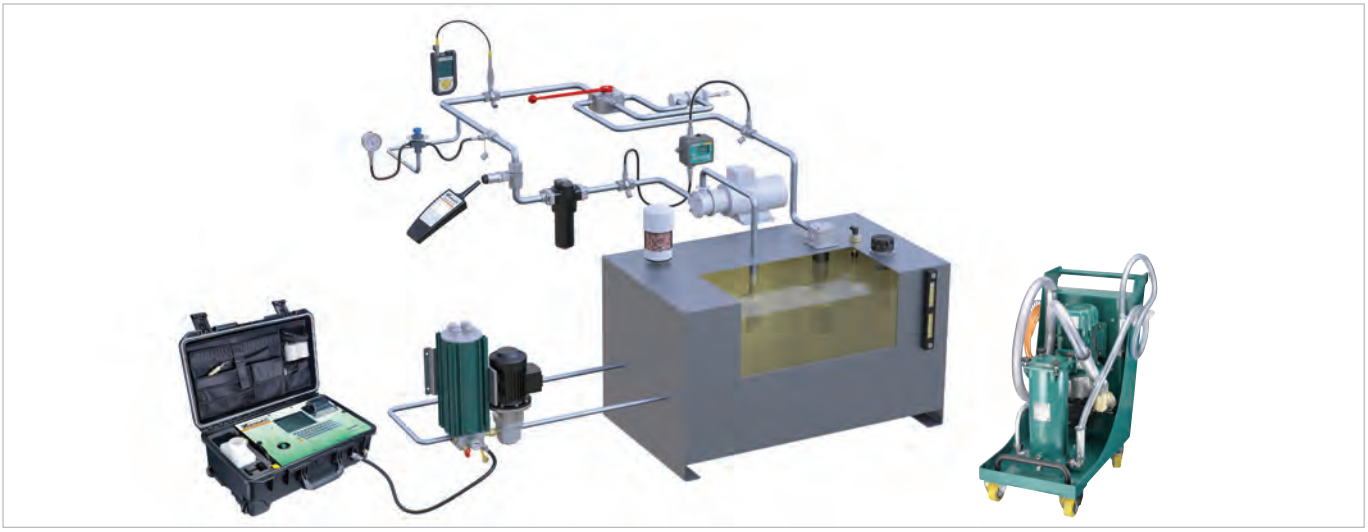

Aligned with the needs of the market, the product groups

- **STAUFF Test**
- **STAUFF Diagtronics**
- **STAUFF Filtration Technology**
- **STAUFF Hydraulic Accessories**

include a comprehensive range of analogue and digital measuring equipment and devices, filtration systems and replacement filter elements as well as accessories for the construction of tanks, reservoirs, power packs and gear boxes in mobile and industrial hydraulics.

The offer is completed by relevant value-added services:

- Support with the **selection of suitable components** and ordering options; provision of **customised solutions** according to customer's specifications or based on our in-house development – from prototyping to large scale production

- Analysis of existing hydraulic circuits aimed at filtration systems, tank components and monitoring devices that perfectly match to the specific requirements, and developing integrated concepts to increase the efficiency and performance of machines and equipment

- Individually coordinated **procurement solutions** and **supply models**

STAUFF Flanges

The STAUFF Flanges product group is closely aligned with the market requirements and contains an extensive range of single-part and multi-part SAE flange connectors in the standard and high pressure series according to SAE J 518 C and ISO 6162-1/2.

The tandard-Pressure Series (3000 PSI) contains flange components with maximum operating pressures between 35 bar and 350 bar or 508 PSI and 5075 PSI and is available for a variety of nominal sizes between DN 13 (1/2") and DN 127 (5").

The 6.000 PSI High-Pressure Series is suitable for maximum operating pressures up to 420 bar or 6090 PSI and covers nominal sizes between DN 13 (1/2") and DN 76 (3"),

STAUFF SAE Flanges are used as a reliable alternative in applications where of the use of regular tube fittings is not permitted or technically not possible due to the required operating pressure, the size or the limited mounting space.

Compared to tube fittings, the biggest advantage of SAE Flanges is the considerably higher pressure resistance for most sizes and the continuous pressure level in the High-Pressure Series (6000 PSI).

The STAUFF Flanges product group in completed by various types and designs of gear pump flanges made from carbon steel and aluminium in accordance with German and Italian connection standards.

A

SAE Split Flange Halves 14

DB

SAE Flange Clamp 16

BM

SAE Split Flange Halves (Flat Style) 18

DB-FL

SAE Flange Clamp (Flat Style) 19

BM-FL

SAE Flange Clamp with Metric Tapped Holes 20

BM-G

A

SAE Split Flange Halves
Type DB ▪ 3000 PSI Series

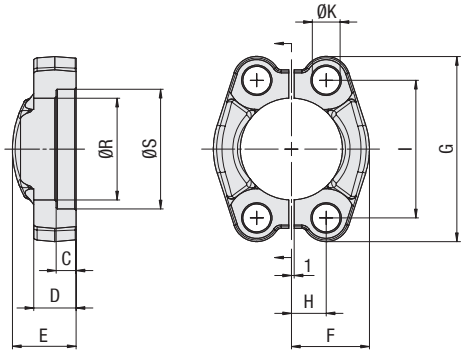

3000 PSI Standard Pressure Series (according to ISO 6162-1:2012)

Nominal Size		PN[1] (bar/PSI)	Dimensions (mm/in)										Weight (kg/lbs) ca.	for Bolts		Ordering Codes
DN	(in)	10.9	ØR	ØS	C	D	E	F	G	H	I	ØK[2]	per 100	Metric	UNC	
13	1/2	350	24,3	31	6,2	13	19	22,8	54	8,75	38,1	8,7	13,20	M8x25	5/16–18 UNC x 1-1/4	**DB-301-W66**
		5075	.96	1.22	.24	.51	.75	.90	2.13	.34	1.50	.34	29.04			
19	3/4	350	32,2	38,9	6,2	14	22	25,9	65	11,15	47,6	10,5	17,00	M10x30	3/8–16 UNC x 1-1/4	**DB-302-W66**
		5075	1.27	1.53	.24	.55	.87	1.02	2.56	.44	1.87	.41	37.40			
25	1	320	38,5	45,3	7,5	16	24	29,2	70	13,1	52,4	10,5	22,00	M10x30	3/8–16 UNC x 1-1/4	**DB-303-W66**
		4641	1.52	1.78	.30	.63	.94	1.15	2.76	.52	2.06	.41	48.40			
32	1-1/4	280	43,7	51,6	7,5	14	22	36,3	79,5	15,1	58,7	12	30,00		7/16–14 UNC x 1-1/2	**DB-304-U-W66**
		4061	1.72	2.03	.30	.55	.87	1.43	3.13	.59	2.31	.47	66.00			
32	1-1/4	280	43,7	51,6	7,5	14	22	36,3	79,5	15,1	58,7	12,5	31,20	M12x35		**DB-304-M12-W66**
		4061	1.72	2.03	.30	.55	.87	1.43	3.13	.59	2.31	.49	68.64			
32	1-1/4	280	43,7	51,6	7,5	14	22	36,3	79,5	15,1	58,7	10,5	32,20	M10x30		**DB-304-M-W66**
		4061	1.72	2.03	.30	.55	.87	1.43	3.13	.59	2.31	.41	70.84			
38	1-1/2	210	50,8	61,1	7,5	16	25	41,1	94	17,85	69,9	13,5	47,00	M12x35	1/2–13 UNC x 1-1/2	**DB-305-W66**
		3045	2.00	2.41	.30	.63	.98	1.62	3.70	.70	2.75	.53	103.40			
38	1-1/2	210	50,8	61,1	7,5	16	25	41,1	94	17,85	69,9	15	46,00	M14x35		**DB-305-M14-W66**
		3045	2.00	2.41	.30	.63	.98	1.62	3.70	.70	2.75	.59	101.20			
51	2	210	62,8	72,3	9	16	26	48,2	102	21,45	77,8	13,5	54,20	M12x35	1/2–13 UNC x 1-1/2	**DB-306-W66**
		3045	2.47	2.85	.35	.63	1.02	1.90	4.02	.84	3.06	.53	119.24			
51	2	210	62,8	72,3	9	16	26	48,2	102	21,45	77,8	15	50,00	M14x35		**DB-306-M14-W66**
		3045	2.47	2.85	.35	.63	1.02	1.90	4.02	.84	3.06	.59	110.00			
64	2-1/2	175	74,9	84,9	9	19	38	54,1	114,5	25,4	88,9	13,5	90,30	M12x40	1/2–13 UNC x 1-1/2	**DB-307-W66**
		2538	2.95	3.34	.35	.75	1.50	2.13	4.51	1.00	3.50	.53	198.66			
64	2-1/2	175	74,9	84,9	9	19	38	54,1	114,5	25,4	88,9	15	74,00	M14x40		**DB-307-M14-W66**
		2538	2.95	3.34	.35	.75	1.50	2.13	4.51	1.00	3.50	.59	162.80			
76	3	160	90,9	102,4	9	22	41	65,3	135	30,95	106,4	17	135,60	M16x50	5/8–11 UNC x 2	**DB-308-W66**
		2320	3.58	4.03	.35	.87	1.61	2.57	5.31	1.22	4.19	.67	298.32			
89	3-1/2	35	102,4	115,1	10,7	22	28	69,6	152	34,95	120,7	17	135,00	M16x50	5/8–11 UNC x 2	**DB-309-W66**
		508	4.03	4.53	.42	.87	1.10	2.74	5.98	1.38	4.75	.67	297.00			
102	4	35	115	127,8	10,7	25	35	75,9	162	38,9	130,2	17	170,00	M16x50	5/8–11 UNC x 2	**DB-310-W66**
		508	4.53	5.03	.42	.98	1.38	2.99	6.38	1.53	5.13	.67	374.00			
127	5	35	140,5	153,2	10,7	28	41	90,4	184	46 5	152,4	17	246,80	M16x55	5/8–11 UNC x 2-1/4	**DB-311-W66**
		508	5.53	6.03	.42	1.10	1.61	3.56	7.24	.00	6.00	.67	542.96			

Materials / Ordering Options / Examples

* Pair of SAE Split Flange Halves made of Steel S355J2 / C45 or equivalent, zinc-plated and thick-film-passivated **DB-...-W66**
* Pair of SAE Split Flange Halves made of Steel S355J2 / C45 or equivalent, zinc/nickel-plated (on request) **DB-...-W3**
* Pair of SAE Split Flange Halves made of Stainless Steel V4A – 1.4404 (on request) **DB-...-W5**

* Kit including Metric bolts 10.9, spring rings, O-ring made of NBR (Buna-N®) **DB-...-M-B-W129-K**
* Kit including Metric bolts 10.9, spring rings, O-ring made of FKM (Viton®) **DB-...-M-V-W129-K**

* Kit including UNC bolts (Grade 8), spring rings, O-ring made of NBR (Buna-N®) **DB-...-U-B-W129-K**

[1] The maximum working pressure PN (bar/PSI) applies only to the flange itself and depends on the bolts used (Grade 10.9). The actual maximum working pressure depends on the thickness and the quality of the tube used.

[2] Dimensions of screw holes in part different to the ISO to match both Metric and UNC bolts.

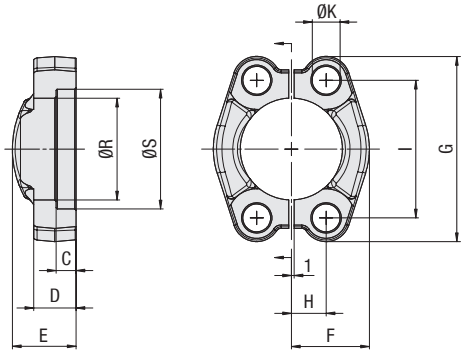

500 bar
7251 PSI

SAE Split Flange Halves
Type DB ▪ 6000 PSI Series

6000 PSI High Pressure Series (according to ISO 6162-2:2012)

Nominal Size DN	(in)	PN[1] (bar/PSI) 10.9	Dimensions (mm/in) ØR	ØS	C	D	E	F	G	H	I	ØK[2]	Weight (kg/lbs) ca. per 100	for Bolts Metric	UNC	Ordering Codes
13	1/2	500	24,6	32,5	7,2	16	22	23,6	56,5	9,10	40,5	8,7	16,70	M8x30	5/16–18 UNC x 1-1/4	**DB-601-W66**
		7251	.97	1.28	.28	.63	.87	.93	2.22	.36	1.59	.34	36.74			
19	3/4	500	32,5	42	8,2	19	28	30	71	11,90	50,8	10,5	33,20	M10x35	3/8–16 UNC x 1-1/2	**DB-602-W66**
		7251	1.28	1.65	.32	.75	1.10	1.18	2.80	.47	2.00	.41	73.04			
25	1	500	38,8	48,4	9	24	33	34,8	81	13,90	57,2	11,9	51,30		7/16–14 UNC x 1-3/4	**DB-603-U-W66**
		7251	1.53	1.91	.35	.94	1.30	1.37	3.19	.55	2.25	.47	112.86			
25	1	500	38,8	48,4	9	24	33	34,8	81	13,90	57,2	13	52,20	M12x45		**DB-603-M-W66**
		7251	1.53	1.91	.35	.94	1.30	1.37	3.19	.55	2.25	.51	114.84			
32	1-1/4	500	44,5	54,8	9,8	27	38	38,6	95	15,90	66,6	13,5	83,70	M12x45	1/2–13 UNC x 1-3/4	**DB-604-W66**
		7251	1.75	2.16	.39	1.06	1.50	1.52	3.74	.63	2.62	.53	184.14			
32	1-1/4	500	44,5	54,8	9,8	27	38	38,6	95	15,90	66,6	15	80,00	M14x45		**DB-604-M14-W66**
		7251	1.75	2.16	.39	1.06	1.50	1.52	3.74	.63	2.62	.59	176.00			
38	1-1/2	500	51,6	64,3	12	30	43	47,5	113	18,25	79,3	17	135,00	M16x55	5/8–11 UNC x 2-1/4	**DB-605-W66**
		7251	2.03	2.53	.47	1.18	1.69	1.87	4.45	.72	3.12	.67	297.00			
51	2	500	67,6	80,2	12	37	52	56,9	133	22,25	96,8	21	210,00	M20x70	3/4–10 UNC x 2-3/4	**DB-606-W66**
		7251	2.66	3.16	.47	1.46	2.05	2.24	5.24	.88	3.81	.83	462.00			

[1] The maximum working pressure PN (bar/PSI) applies only to the flange itself and depends on the bolts used (Grade 10.9). The actual maximum working pressure depends on the thickness and the quality of the tube used.

[2] Dimensions of screw holes in part different to the ISO to match both Metric and UNC bolts.

Materials / Ordering Options / Examples

* Pair of SAE Split Flange Halves made of Steel S355J2 / C45 or equivalent, zinc-plated and thick-film-passivated **DB-...-W66**
* Pair of SAE Split Flange Halves made of Steel S355J2 / C45 or equivalent, zinc/nickel-plated (on request) **DB-...-W3**
* Pair of SAE Split Flange Halves made of Stainless Steel V4A – 1.4404 (on request) **DB-...-W5**

* Kit including Metric bolts 10.9, spring rings, O-ring made of NBR (Buna-N®) **DB-...-M-B-W129-K**
* Kit including Metric bolts 10.9, spring rings, O-ring made of FKM (Viton®) **DB-...-M-V-W129-K**

* Kit including UNC bolts (Grade 8), spring rings, O-ring made of NBR (Buna-N®) **DB-...-U-B-W129-K**

A

SAE Flange Clamp
Type BM ▪ 3000 PSI Series

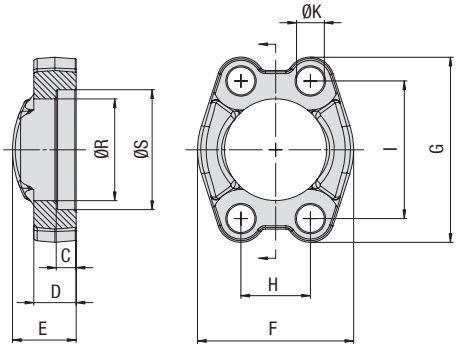

3000 PSI Standard Pressure Series (according to ISO 6162-1:2012)

Nominal Size		PN[1] (bar/PSI)	Dimensions (mm/in)										Weight (kg/lbs) ca.	for Bolts		Ordering Codes
DN	(in)	10.9	ØR	ØS	C	D	E	F	G	H	I	ØK[2]	per 100	Metric	UNC	
13	1/2	350	24,3	31	6,2	13	19	46	54	17,5	38,1	8,7	13,7	M8x25	5/16–18 UNC x 1-1/4	**BM-301-W66**
		5075	.96	1.22	.24	.51	.75	1.81	2.13	.69	1.50	.34	30.14			
19	3/4	350	32,2	38,9	6,2	14	22	52	65	22,3	47,6	10,5	20,1	M10x30	3/8–16 UNC x 1-1/4	**BM-302-W66**
		5075	1.27	1.53	.24	.55	.87	2.05	2.56	.88	1.87	.41	44.22			
25	1	320	38,5	45,3	7,5	16	24	59	70	26,2	52,4	10,5	22,9	M10x30	3/8–16 UNC x 1-1/4	**BM-303-W66**
		4641	1.52	1.78	.30	.63	.94	2.32	2.76	1.03	2.06	.41	50.38			
32	1-1/4	280	43,7	51,6	7,5	14	22	73	79,5	30,2	58,7	12	30,0		7/16–14 UNC x 1-1/2	**BM-304-U-W66**
		4061	1.72	2.03	.30	.55	.87	2.87	3.13	1.19	2.31	.47	66.00			
32	1-1/4	280	43,7	51,6	7,5	14	22	73	79,5	30,2	58,7	12,5	32,3	M12x35		**BM-304-M12-W66**
		4061	1.72	2.03	.30	.55	.87	2.87	3.13	1.19	2.31	.49	71.06			
32	1-1/4	280	43,7	51,6	7,5	14	22	73	79,5	30,2	58,7	10,5	32,8	M10x30		**BM-304-M-W66**
		4061	1.72	2.03	.30	.55	.87	2.87	3.13	1.19	2.31	.41	72.16			
38	1-1/2	210	50,8	61,1	7,5	16	25	83	94	35,7	69,9	13,5	48,6	M12x35	1/2–13 UNC x 1-1/2	**BM-305-W66**
		3045	2.00	2.41	.30	.63	.98	3.27	3.70	1.41	2.75	.53	106.92			
38	1-1/2	210	50,8	61,1	7,5	16	25	83	94	35,7	69,9	15	45,0	M14x35		**BM-305-M14-W66**
		3045	2.00	2.41	.30	.63	.98	3.27	3.70	1.41	2.75	.59	99.00			
51	2	210	62,8	72,3	9	16	26	97	102	42,9	77,8	13,5	55,6	M12x35	1/2–13 UNC x 1-1/2	**BM-306-W66**
		3045	2.47	2.85	.35	.63	1.02	3.82	4.02	1.69	3.06	.53	122.32			
51	2	210	62,8	72,3	9	16	26	97	102	42,9	77,8	15	50,0	M14x35		**BM-306-M14-W66**
		3045	2.47	2.85	.35	.63	1.02	3.82	4.02	1.69	3.06	.59	110.00			
64	2-1/2	175	74,9	84,9	9	19	38	109	114,5	50,8	88,9	13,5	89,7	M12x40	1/2–13 UNC x 1-1/2	**BM-307-W66**
		2538	2.95	3.34	.35	.75	1.50	4.29	4.51	2.00	3.50	.53	197.34			
64	2-1/2	175	74,9	84,9	9	19	38	109	114,5	50,8	88,9	15	74,0	M14x40		**BM-307-M14-W66**
		2538	2.95	3.34	.35	.75	1.50	4.29	4.51	2.00	3.50	.59	162.80			
76	3	160	90,9	102,4	9	22	41	131	135	61,9	106,4	17	135,9	M16x50	5/8–11 UNC x 2	**BM-308-W66**
		2320	3.58	4.03	.35	.87	1.61	5.16	5.31	2.44	4.19	.67	298.99			
89	3-1/2	35	102,4	115,1	10,7	22	28	140	152	69,9	120,7	17	134,1	M16x50	5/8–11 UNC x 2	**BM-309-W66**
		508	4.03	4.53	.42	.87	1.10	5.51	5.98	2.75	4.75	.67	295.02			
102	4	35	115	127,8	10,7	25	35	152	162	77,8	130,2	17	166,0	M16x50	5/8–11 UNC x 2	**BM-310-W66**
		508	4.53	5.03	.42	.98	1.38	5.98	6.38	3.06	5.13	.67	365.20			
127	5	35	140,5	153,2	10,7	28	41	181	184	92,1	152,4	17	253,8	M16x55	5/8–11 UNC x 2-1/4	**BM-311-W66**
		508	5.53	6.03	.42	1.10	1.61	7.13	7.24	3.63	6.00	.67	558.36			

Materials / Ordering Options / Examples

* Flange Clamp made of Steel S355J2 / C45 or equivalent, zinc-plated and thick-film-passivated **BM-...-W66**
* Flange Clamp made of Steel S355J2 / C45 or equivalent, zinc/nickel-plated (on request) **BM-...-W3**
* Flange Clamp made of Stainless Steel V4A – 1.4404 (on request) **BM-...-W5**

* Kit including Metric bolts 10.9, spring rings, O-ring made of NBR (Buna-N®) **BM-...-M-B-W129-K**
* Kit including Metric bolts 10.9, spring rings, O-ring made of FKM (Viton®) **BM-...-M-V-W129-K**

* Kit including UNC bolts (Grade 8), spring rings, O-ring made of NBR (Buna-N®) **BM-...-U-B-W129-K**

[1] The maximum working pressure PN (bar/PSI) applies only to the flange itself and depends on the bolts used (Grade 10.9). The actual maximum working pressure depends on the thickness and the quality of the tube used.

[2] Dimensions of screw holes in part different to the ISO to match both Metric and UNC bolts.

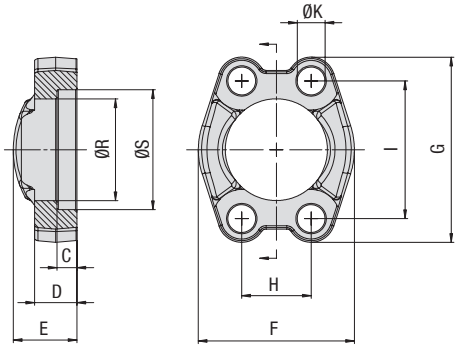

500 bar 7251 PSI

SAE Flange Clamp Type BM ▪ 6000 PSI Series

6000 PSI High Pressure Series (according to ISO 6162-2:2012)

Nominal Size DN	(in)	PN[1] (bar/PSI) 10.9	Dimensions (mm/in) ØR	ØS	C	D	E	F	G	H	I	ØK[2]	Weight (kg/lbs) ca. per 100	for Bolts Metric	UNC	Ordering Codes
13	1/2	500	24,6	32,5	7,2	16	22	48	56,5	18,2	40,5	8,7	17,3	M8x30	5/16–18 UNC x 1-1/4	**BM-601-W66**
		7251	.97	1.28	.28	.63	.87	1.89	2.22	.72	1.59	.34	38.06			
19	3/4	500	32,5	42	8,2	19	28	60	71	23,8	50,8	10,5	35,0	M10x35	3/8–16 UNC x 1-1/2	**BM-602-W66**
		7251	1.28	1.65	.32	.75	1.10	2.36	2.80	.94	2.00	.41	77.00			
25	1	500	38,8	48,4	9	24	33	70	81	27,8	57,2	12	57,8		7/16–14 UNC x 1-3/4	**BM-603-U-W66**
		7251	1.53	1.91	.35	.94	1.30	2.76	3.19	1.09	2.25	.47	127.16			
25	1	500	38,8	48,4	9	24	33	70	81	27,8	57,2	13	55,7	M12x45		**BM-603-M-W66**
		7251	1.53	1.91	.35	.94	1.30	2.76	3.19	1.09	2.25	.51	122.54			
32	1-1/4	500	44,5	54,8	9,8	27	38	78	95	31,8	66,6	13,5	85,0	M12x45	1/2–13 UNC x 1-3/4	**BM-604-W66**
		7251	1.75	2.16	.39	1.06	1.50	3.07	3.74	1.25	2.62	.53	187.00			
32	1-1/4	500	44,5	54,8	9,8	27	38	78	95	31,8	66,6	15	80,8	M14x45		**BM-604-M14-W66**
		7251	1.75	2.16	.39	1.06	1.50	3.07	3.74	1.25	2.62	.59	177.76			
38	1-1/2	500	51,6	64,3	12	30	43	95	113	36,5	79,3	17	139,5	M16x55	5/8–11 UNC x 2-1/4	**BM-605-W66**
		7251	2.03	2.53	.47	1.18	1.69	3.74	4.45	1.44	3.12	.67	306.90			
51	2	500	67,6	80,2	12	37	52	114	133	44,5	96,8	21	211,0	M20x70	3/4–10 UNC x 2-3/4	**BM-606-W66**
		7251	2.66	3.16	.47	1.46	2.05	4.49	5.24	1.75	3.81	.83	464.20			

[1] The maximum working pressure PN (bar/PSI) applies only to the flange itself and depends on the bolts used (Grade 10.9). The actual maximum working pressure depends on the thickness and the quality of the tube used.

[2] Dimensions of screw holes in part different to the ISO to match both Metric and UNC bolts.

Materials / Ordering Options / Examples

* Flange Clamp made of Steel S355J2 / C45 or equivalent, zinc-plated and thick-film-passivated **BM-...-W66**
* Flange Clamp made of Steel S355J2 / C45 or equivalent, zinc/nickel-plated (on request) **BM-...-W3**
* Flange Clamp made of Stainless Steel V4A – 1.4404 (on request) **BM-...-W5**

* Kit including Metric bolts 10.9, spring rings, O-ring made of NBR (Buna-N®) **BM-...-M-B-W129-K**
* Kit including Metric bolts 10.9, spring rings, O-ring made of FKM (Viton®) **BM-...-M-V-W129-K**

* Kit including UNC bolts (Grade 8), spring rings, O-ring made of NBR (Buna-N®) **BM-...-U-B-W129-K**

A

SAE Split Flange Halves (Flat Style)
Type DB-FL ▪ 3000 / 6000 PSI Series

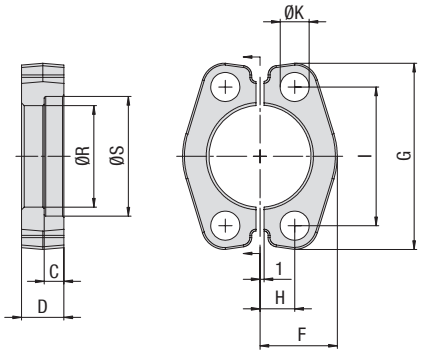

3000 PSI Standard Pressure Series (according to ISO 6162-1:2012)

Nominal Size DN	(in)	PN[1] (bar/PSI) 10.9	Dimensions (mm/in) ØR	ØS	C	D	F	G	H	I	ØK[2]	Weight (kg/lbs) ca. per 100	for Bolts Metric	UNC	Ordering Codes
13	1/2	350	24,3	31	6,2	13	22,8	54	8,75	38,1	8,7	10,6	M8x25	5/16–18 UNC x 1-1/4	DB-FL-301-W66
		5075	.96	1.22	.24	.51	.90	2.13	.34	1.50	.34	23.32			
19	3/4	350	32,2	38,9	6,2	14	25,9	65	11,15	47,6	10,5	15,1	M10x30	3/8–16 UNC x 1-1/4	DB-FL-302-W66
		5075	1.27	1.53	.24	.55	1.02	2.56	.44	1.87	.41	33.13			
25	1	320	38,5	45,3	7,5	16	29,2	70	13,1	52,4	10,5	19,0	M10x30	3/8–16 UNC x 1-1/4	DB-FL-303-W66
		4641	1.52	1.78	.30	.63	1.15	2.76	.52	2.06	.41	41.80			
32	1-1/4	280	43,7	51,6	7,5	14	36,6	79	15,1	58,7	10,5	25,4	M10x35		DB-FL-304-M-W66
		4061	1.72	2.03	.30	.55	1.44	3.11	.59	2.31	.41	55.88			
38	1-1/2	210	50,8	61,6	7,5	16	41,1	94	17,85	69,9	13,5	40,3	M12x35	1/2–13 UNC x 1-1/2	DB-FL-305-W66
		3045	2.00	2.43	.30	.63	1.62	3.70	.70	2.75	.53	88.66			
51	2	210	62,8	72,3	9	16	48,2	102	21,45	77,8	13,5	45,4	M12x35	1/2–13 UNC x 1-1/2	DB-FL-306-W66
		3045	2.47	2.85	.35	.63	1.90	4.02	.84	3.06	.53	99.81			
64	2-1/2	175	74,9	84,9	9	19	53	115	25,4	88,9	13,5	63,4	M12x40	1/2–13 UNC x 1-1/2	DB-FL-307-W66
		2538	2.95	3.34	.35	.75	2.09	4.53	1.00	3.50	.53	139.48			
76	3	160	90,9	102,4	9	22	64,3	135	30,95	106,4	17	103,6	M16x50	5/8–11 UNC x 2	DB-FL-308-W66
		1450	3.58	4.03	.35	.87	2.53	5.31	1.22	4.19	.67	227.92			

6000 PSI High Pressure Series (according to ISO 6162-2:2012)

500 bar / 7251 PSI

Nominal Size DN	(in)	PN[1] (bar/PSI) 10.9	Dimensions (mm/in) ØR	ØS	C	D	F	G	H	I	ØK[2]	Weight (kg/lbs) ca. per 100	for Bolts Metric	UNC	Ordering Codes
13	1/2	500	24,6	32,5	7,2	16	23,6	56	9,1	40,5	8,7	15,1	M8x30	5/16–18 UNC x 1-1/4	DB-FL-601-W66
		7251	.97	1.28	.28	.63	.93	2.20	.36	1.59	.34	33.18			
19	3/4	500	32,5	42	8,2	20	30,0	71	11,9	50,8	10,5	30,8	M10x35	3/8–16 UNC x 1-1/2	DB-FL-602-W66
		7251	1.28	1.65	.32	.79	1.18	2.80	.47	2.00	.41	67.76			
25	1	500	38,8	48,4	9	25	34,8	81	13,9	57,2	13	52,2	M12x45		DB-FL-603-M-W66
		7251	1.53	1.91	.35	.98	1.37	3.19	.55	2.25	.51	114.84			
32	1-1/4	500	44,5	54,8	9,8	27	38,6	95	15,9	66,6	15	69,5	M14x45		DB-FL-604-M14-W66
		7251	1.75	2.16	.39	1.06	1.52	3.74	.63	2.62	.59	152.90			
38	1-1/2	500	51,6	64,3	12	30	47,5	113	18,25	79,3	17	116,8	M16x55	5/8–11 UNC x 2-1/4	DB-FL-605-W66
		7251	2.03	2.53	.47	1.18	1.87	4.45	.72	3.12	.67	256.96			
51	2	500	67,6	80,2	12	37	56,9	133	22,25	96,8	21	184,7	M20x70	3/4–10 UNC x 2-3/4	DB-FL-606-W66
		7251	2.66	3.16	.47	1.46	2.24	5.24	.88	3.81	.83	406.34			
64	2-1/2	500	89,5	108,5	20	48	75	166	29,35	123,8	25	281,4	M24x80		DB-FL-607-M-W66[3]
		7251	3.52	4.27	.79	1.89	2.95	6.54	1.16	4.87	.98	619.08			
76	3	500	114,5	132,5	25	58	89	210	35,7	152,4	32	462,1	M30x90		DB-FL-608-M-W66[3]
		7251	4.51	5.22	.98	2.28	3.50	8.27	1.41	6.00	1.26	1016.62			

Materials / Ordering Options / Examples

* Pair of SAE Split Flange Halves (Flat Style) made of Steel C55 or equivalent, zinc-plated and thick-film-passivated — **DB-FL-...-W66**

* Kit including Metric bolts 10.9, spring rings, O-ring made of NBR (Buna-N®) — **DB-FL-...-M-B-W129-K**
* Kit including Metric bolts 10.9, spring rings, O-ring made of FKM (Viton®) — **DB-FL-...-M-V-W129-K**

* Kit including UNC bolts (Grade 8), spring rings, O-ring made of NBR (Buna-N®) — **DB-FL-...-U-B-W129-K**

[1] The maximum working pressure PN (bar/PSI) applies only to the flange itself and depends on the bolts used (Grade 10.9). The actual maximum working pressure depends on the thickness and the quality of the tube used.

[2] Dimensions of screw holes in part different to the ISO to match both Metric and UNC bolts.

[3] Made of steel C45 or equivalent, zinc-plated and thick-film-passivated.

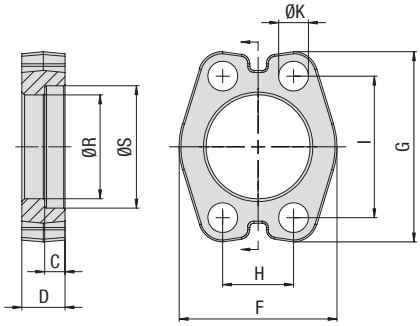

SAE Flange Clamp (Flat Style)
Type BM-FL ▪ 3000 / 6000 PSI Series

3000 PSI Standard Pressure Series (according to ISO 6162-1:2012)

Nominal Size DN	(in)	PN[1] (bar/PSI) 10.9	Dimensions (mm/in) ØR	ØS	C	D	F	G	H	I	ØK[2]	Weight (kg/lbs) ca. per 100	for Bolts Metric	UNC	Ordering Codes
13	1/2	350	24,3	31	6,2	13	45,6	54	17,5	38,1	8,7	11,4	M8x25	5/16–18 UNC x 1-1/4	BM-FL-301-W66
		5075	.96	1.22	.24	.51	1.80	2.13	.69	1.50	.34	25.08			
19	3/4	350	32,2	38,9	6,2	14	51,8	65	22,3	47,6	10,5	15,0	M10x30	3/8–16 UNC x 1-1/4	BM-FL-302-W66
		5075	1.27	1.53	.24	.55	2.04	2.56	.88	1.87	.41	33.00			
25	1	320	38,5	45,3	7,5	16	58,4	70	26,2	52,4	10,5	19,2	M10x30	3/8–16 UNC x 1-1/4	BM-FL-303-W66
		4641	1.52	1.78	.30	.63	2.30	2.76	1.03	2.06	.41	42.24			
32	1-1/4	280	43,7	51,6	7,5	14	73,2	79	30,2	58,7	10,5	25,7	M10x35		BM-FL-304-M-W66
		4061	1.72	2.03	.30	.55	2.88	3.11	1.19	2.31	.41	56.54			
38	1-1/2	210	50,8	61,1	7,5	16	82,2	94	35,7	69,9	13,5	39,1	M12x35	1/2–13 UNC x 1-1/2	BM-FL-305-W66
		3045	2.00	2.41	.30	.63	3.24	3.70	1.41	2.75	.53	86.02			
51	2	210	62,8	72,3	9	16	96,4	102	42,9	77,8	13,5	47,3	M12x35	1/2–13 UNC x 1-1/2	BM-FL-306-W66
		3045	2.47	2.85	.35	.63	3.80	4.02	1.69	3.06	.53	104.06			
64	2-1/2	175	74,9	84,9	9	19	106	115	50,8	88,9	13,5	63,6	M12x40	1/2–13 UNC x 1-1/2	BM-FL-307-W66
		2538	2.95	3.34	.35	.75	4.17	4.53	2.00	3.50	.53	139.92			
76	3	160	90,9	102,4	9	22	128,6	135	61,9	106,4	17	104,9	M16x50	5/8–11 UNC x 2	BM-FL-308-W66
		2320	3.58	4.03	.35	.87	5.06	5.31	2.44	4.19	.67	230.78			

500 bar / 7251 PSI

6000 PSI High Pressure Series (according to ISO 6162-2:2012)

Nominal Size DN	(in)	PN[1] (bar/PSI) 10.9	Dimensions (mm/in) ØR	ØS	C	D	F	G	H	I	ØK[2]	Weight (kg/lbs) ca. per 100	for Bolts Metric	UNC	Ordering Codes
13	1/2	500	24,6	32,5	7,2	16	47,2	56	18,2	40,5	8,7	15,0	M8x30	5/16–18 UNC x 1-1/4	BM-FL-601-W66
		7251	.97	1.28	.28	.63	1.86	2.20	.72	1.59	.34	33.00			
19	3/4	500	32,5	42	8	20	60	71	23,8	50,8	10,5	30,1	M10x35	3/8–16 UNC x 1-1/2	BM-FL-602-W66
		7251	1.28	1.65	.31	.79	2.36	2.80	.94	2.00	.41	66.22			
25	1	500	38,8	48,4	9	25	69,6	81	27,8	57,2	13	49,0	M12x45		BM-FL-603-M-W66
		7251	1.53	1.91	.35	.98	2.74	3.19	1.09	2.25	.51	107.80			
32	1-1/4	500	44,5	54,8	9,8	27	77,2	95	31,8	66,6	15	71,5	M14x45		BM-FL-604-M14-W66
		7251	1.75	2.16	.39	1.06	3.04	3.74	1.25	2.62	.59	157.30			
38	1-1/2	500	51,6	64,3	12	30	89,4	113	36,5	79,3	17	118,9	M16x55	5/8–11 UNC x 2-1/4	BM-FL-605-W66
		7251	2.03	2.53	.47	1.18	3.52	4.45	1.44	3.12	.67	261.58			
51	2	500	67,6	80,2	12	37	113,4	133	44,5	96,8	21	187,4	M20x70	3/4–10 UNC x 2-3/4	BM-FL-606-W66
		7251	2.66	3.16	.47	1.46	4.46	5.24	1.75	3.81	.83	412.28			
64	2-1/2	500	89,5	108,5	20	48	150	166	58,7	123,8	25	187,4	M24x80		BM-FL-607-M-W66[3]
		7251	3.52	4.27	.79	1.89	5.91	6.54	2.31	4.87	.98	412.28			
76	3	500	114,5	132,5	25	58	178	210	71,4	152,4	32	392,0	M30x90		BM-FL-608-M-W66[3]
		7251	4.51	5.22	.98	2.28	7.01	8.27	2.81	6.00	1.26	862.40			

[1] The maximum working pressure PN (bar/PSI) applies only to the flange itself and depends on the bolts used (Grade 10.9). The actual maximum working pressure depends on the thickness and the quality of the tube used.

[2] Dimensions of screw holes in part different to the ISO to match both Metric and UNC bolts.

[3] Made of steel C45 or equivalent, zinc-plated and thick-film-passivated.

Materials / Ordering Options / Examples

* Flange Clamp (Flat Style) made of Steel C55 or equivalent, zinc-plated and thick-film-passivated — **BM-FL-...-W66**

* Kit including Metric bolts 10.9, spring rings, O-ring made of NBR (Buna-N®) — **BM-FL-...-M-B-W130-K**
* Kit including Metric bolts 10.9, spring rings, O-ring made of FKM (Viton®) — **BM-FL-...-M-V-W130-K**

* Kit including UNC bolts (Grade 8), spring rings, O-ring made of NBR (Buna-N®) — **BM-FL-...-U-B-W129-K**

A

SAE Flange Clamp with Metric Tapped Holes
Type BM-G ▪ 3000 / 6000 PSI Series

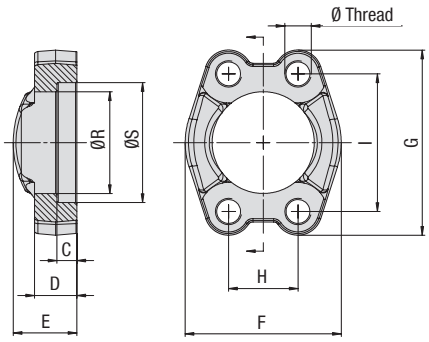

3000 PSI Standard Pressure Series (according to ISO 6162-1:2012)

Nominal Size DN	(in)	PN[1] (bar/PSI) 10.9	Dimensions (mm/in) ØR	ØS	C	D	E	F	G	H	I	Weight (kg/lbs) ca. per 100	Ø Thread [2]	Ordering Codes
13	1/2	350	24,3	31	6,2	13	19	46	54	17,5	38,1	13,9	M8	BM-G-301-W66
		5075	.96	1.22	.24	.51	.75	1.81	2.13	.69	1.50	30.58		
19	3/4	350	32,2	38,9	6,2	14	22	52	65	22,3	47,6	19,0	M10	BM-G-302-W66
		5075	1.27	1.53	.24	.55	.87	2.05	2.56	.88	1.87	41.80		
25	1	320	38,5	45,3	7,5	16	24	59	70	26,2	52,4	24,4	M10	BM-G-303-W66
		4641	1.52	1.78	.30	.63	.94	2.32	2.76	1.03	2.06	53.68		
32	1-1/4	280	43,7	51,6	7,5	14	22	73	79,5	30,2	58,7	32,1	M10 (M12)	BM-G-304-W66
		4061	1.72	2.03	.30	.55	.87	2.87	3.13	1.19	2.31	70.62		
38	1-1/2	210	50,8	61,1	7,5	16	25	83	94	35,7	69,9	49,0	M12 (M14)	BM-G-305-W66
		3045	2.00	2.41	.30	.63	.98	3.27	3.70	1.41	2.75	107.80		
51	2	210	62,8	72,3	9	16	26	97	102	42,9	77,8	55,5	M12 (M14)	BM-G-306-W66
		3045	2.47	2.85	.35	.63	1.02	3.82	4.02	1.69	3.06	122.10		
64	2-1/2	175	74,9	84,9	9	19	38	109	114,5	50,8	88,9	94,9	M12 (M14)	BM-G-307-W66
		2538	2.95	3.34	.35	.75	1.50	4.29	4.51	2.00	3.50	208.78		
76	3	160	90,9	102,4	9	22	41	131	135	61,9	106,4	138,1	M16	BM-G-308-W66
		2320	3.58	4.03	.35	.87	1.61	5.16	5.31	2.44	4.19	303.82		
89	3-1/2	35	102,4	115,1	10,7	22	28	140	152	69,9	120,7	132,5	M16	BM-G-309-W66
		508	4.03	4.53	.42	.87	1.10	5.51	5.98	2.75	4.75	291.50		
102	4	35	115	127,8	10,7	25	35	152	162	77,8	130,2	174,8	M16	BM-G-310-W66
		508	4.53	5.03	.42	.98	1.38	5.98	6.38	3.06	5.13	384.56		
127	5	35	140,5	153,2	10,7	28	41	181	184	92,1	152,4	256,0	M16	BM-G-311-W66
		508	5.53	6.03	.42	1.10	1.61	7.13	7.24	3.63	6.00	563.20		

6000 PSI High Pressure Series (according to ISO 6162-2:2012)

500 bar / 7251 PSI

Nominal Size DN	(in)	PN[1] (bar/PSI) 10.9	Dimensions (mm/in) ØR	ØS	C	D	E	F	G	H	I	Weight (kg/lbs) ca. per 100	Ø Thread	Ordering Codes
13	1/2	500	24,6	32,5	7,2	16	22	48	56,5	18,2	40,5	18,3	M8	BM-G-601-W66
		7251	.97	1.28	.28	.63	.87	1.89	2.22	.72	1.59	40.26		
19	3/4	500	32,5	42	8,2	19	28	60	71	23,8	50,8	34,0	M10	BM-G-602-W66
		7251	1.28	1.65	.32	.75	1.10	2.36	2.80	.94	2.00	74.80		
25	1	500	38,8	48,4	9	24	33	70	81	27,8	57,2	57,4	M12	BM-G-603-W66
		7251	1.53	1.91	.35	.94	1.30	2.76	3.19	1.09	2.25	126.28		
32	1-1/4	500	44,5	54,8	9,8	27	38	78	95	31,8	66,6	82,9	M12	BM-G-604-W66
		7251	1.75	2.16	.39	1.06	1.50	3.07	3.74	1.25	2.62	182.38		
32	1-1/4	500	44,5	54,8	9,8	27	38	78	95	31,8	66,6	85,4	M14	BM-G-604-M14-W66
		7251	1.75	2.16	.39	1.06	1.50	3.07	3.74	1.25	2.62	187.88		
38	1-1/2	500	51,6	64,3	12	30	43	95	113	36,5	79,3	143,4	M16	BM-G-605-W66
		7251	2.03	2.53	.47	1.18	1.69	3.74	4.45	1.44	3.12	315.48		
51	2	500	67,6	80,2	12	37	52	114	133	44,5	96,8	218,8	M20	BM-G-606-W66
		7251	2.66	3.16	.47	1.46	2.05	4.49	5.24	1.75	3.81	481.36		
64	2-1/2	500	108,5	89,5	48	48	20	150	58,7	175	123,8	403,8	M24	BM-G-607-W66
		7251	7,5	6,2	3,3	3,3	1,4	10,3	4,0	12,1	8,5	888.36		
76	3	420	132,5	114,5	58	58	25	178	71,4	210	152,4	704,2	M30	BM-G-608-W66
		6090	9,1	7,9	4,0	4,0	1,7	12,3	4,9	14,5	10,5	1549.24		

Materials / Ordering Options / Examples

* Flange Clamp with Metric tapped holes made of Steel S355J2 / C45 or equivalent, zinc-plated and thick-film-passivated — **BM-G-...-W66**
* Flange Clamp with Metric tapped holes made of Steel S355J2 / C45 or equivalent, zinc/nickel-plated (on request) — **BM-G-...-W3**
* Flange Clamp with Metric tapped holes made of Stainless Steel V4A – 1.4404 (on request) — **BM-G-..-W5**

* Size of Metric tapped holes deviating from the standard (e.g. M14) — **BM-G-...-M14-W66**

[1] The maximum working pressure PN (bar/PSI) applies only to the flange itself and depends on the bolts used (Grade 10.9). The actual maximum working pressure depends on the thickness and the quality of the tube used.

[2] Alternative options shown in brackets are available on request.

SAE Butt-Weld Flange Adaptor 24
CAG-ST

SAE Butt-Weld Counterflange Adaptor 24
CSG-ST

SAE Socket-Weld Flange Adaptor 26
CAG-ES

SAE Socket-Weld Counterflange Adaptor 26
CSG-ES

SAE Flange Adaptor with Male BSPT Thread 28
CAG-T

SAE Counterflange Adaptor with Male BSPT Thread 28
CSG-T

SAE Flange Adaptor with Male NPT Thread 30
CAG-N

SAE Counterflange Adaptor with Male NPT Thread 30
CSG-N

SAE Flange Adaptor with Male Metric Thread and 24° Conical Bore (Shape W acc. to DIN 3861) 32
CAG-L/S

SAE 90° Butt-Weld Flange Adaptor 34
CAG90-ST

SAE 90° Flange Adaptor with Male Metric Thread and 24° Conical Bore (Shape W acc. to DIN 3861) 36
CAG90-L/S

B

B

SAE Butt-Weld Flange / Counterflange Adaptor
Type CAG/CSG-ST ▪ 3000 PSI Series

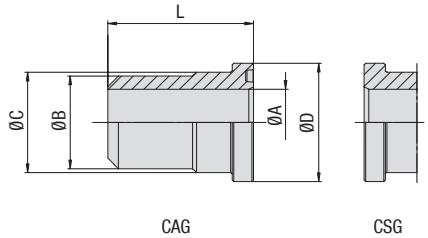

3000 PSI Standard Pressure Series (according to ISO 6162-1:2012)

Nominal Size DN	(in)	PN[1] (bar/PSI) 10.9	Dimensions (mm/in) ØC	ØD	L	Ordering Codes
13	1/2	350	24	30,2	41	CAG-301-ST- ** /**-W1
		5075	.94	1.19	1.61	
/ *replace with* ØB / ØA: 16/12 • 20/15 • 21,3/15,7 • 21,3/13,7 • 21,3/12						
19	3/4	350	31,5	38,1	50	CAG-302-ST-** /** -W1
		5075	1.24	1.50	1.97	
/ *replace with* ØB / ØA: 25/19 • 26,9/19,7 • 28/19						
25	1	320	38	44,45	50	CAG-303-ST- ** /** -W1
		4641	1.50	1.75	1.97	
/ *replace with* ØB / ØA: 25/19 • 28/22 • 30/24 • 30/22 • 33,7/24,7 • 38/30 • 38/28						
32	1-1/4	280	43	50,8	55	CAG-304-ST- ** /**-W1
		4061	1.69	2.00	2.17	
/ *replace with* ØB / ØA: 25/19 • 30/24 • 38/32 • 38/30 • 38/28 • 42,4/33,4 • 42,4/29,8 • 43/31						
38	1-1/2	210	50	60,35	57	CAG-305-ST- ** /**-W1
		3045	1.97	2.38	2.24	
/ *replace with* ØB / ØA: 38/30 • 42/36 • 42/35 • 42/32 • 45/43 • 48,3/41 • 48,3/38,3 • 48,3/34 • 48,3/35 • 50/38						
51	2	210	62	71,4	57	CAG-306-ST-** /**-W1
		3045	2.44	2.81	2.24	
/ *replace with* ØB / ØA: 48,3/38,4 • 55/45 • 60,3/54,5 • 60,3/52 • 60,3/50,3 • 60,3/47,7 • 60,3/44,3						
64	2-1/2	175	74	84,1	58	CAG-307-ST- ** /**-W1
		2538	2.91	3.31	2.28	
/ *replace with* ØB / ØA: 65/53 • 70/55 • 74/65 • 74/61,8 • 74/58						
76	3	160	90	101,6	60	CAG-308-ST- ** /**-W1
		2320	3.54	4.00	2.36	
/ *replace with* ØB / ØA: 80/68 • 89/82,5 • 89/81 • 89/76 • 89/74 • 89/70						
89	3-1/2	35	102	114,3	80	CAG-309-ST- ** /**-W1
		508	4.02	4.50	3.15	
/ *replace with* ØB / ØA: 100/88 • 89/81,7 • 89/73						
102	4	35	114	127	80	CAG-310-ST- ** /**-W1
		508	4.49	5.00	3.15	
/ *replace with* ØB / ØA: 110/98 • 114/107 • 114/102 • 114/96,7						
127	5	35	140	152,4	80	CAG-311-ST-** /**-W1
		508	5.51	6.00	3.15	
/ *replace with* ØB / ØA: 133/120 • 139,7/131,7 • 139,7/119,7						

Please see Page 89 for separate Bolt Sets and Sealings.

Materials / Ordering Options / Examples

* SAE Flange Adaptor (without O-ring) made of Steel S355J2 or equivalent, blank (oiled) — **CAG-...-ST-**/**-W1**
* SAE Counterflange Adaptor made of Steel S355J2 or equivalent, blank (oiled) — **CSG-...-ST-**/**-W1**
* SAE Flange Adaptor (without O-ring) made of Stainless Steel V4A – 1.4404 (on request) — **CAG-...-ST-**/**-W5**

* Kit with DB including Metric bolts 10.9, spring rings, O-ring made of NBR (Buna-N®) — **CAG-...-ST-**/**-W129-K**
* Kit with DB including Metric bolts 10.9, spring rings, O-ring made of FKM (Viton®) — **CAG-...-ST-**/**-V-W129-K**
* Kit with DB including UNC bolts (Grade 8), spring rings, O-ring made of NBR (Buna-N®) — **CAG-...-ST-**/**-U-W129-K**
* Kit with BM including Metric bolts 10.9, spring rings, O-ring made of NBR (Buna-N®) — **CAG-...-ST-**/**-BM-W129-K**

Please always indicate ØB / ØA.

[1] The maximum working pressure PN (bar/PSI) applies only to the flange itself and depends on the bolts used (Grade 10.9). The actual maximum working pressure depends on the thickness and the quality of the tube used.

SAE Butt-Weld Flange / Counterflange Adaptor
Type CAG/CSG-ST ▪ 6000 PSI Series

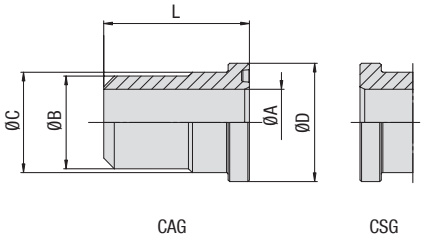

6000 PSI High Pressure Series (according to ISO 6162-2:2012)

Nominal Size DN	(in)	PN[1] (bar/PSI) 10.9	Dimensions (mm/in) ØC	ØD	L	Ordering Codes
13	1/2	420	24	31,8	34	CAG-601-ST-**/**-W1
		6090	.94	1.25	1.34	
/ *replace with* ØB / ØA: 16/12 • 20/15 • 21,3/12,3						
19	3/4	420	32	41,3	38	CAG-602-ST-**/**-W1
		6090	1.26	1.63	1.50	
/ *replace with* ØB / ØA: 16/12 • 20/14 • 25/19 • 25/18 • 25/17 • 26,9/15,7 • 28/18						
25	1	420	38	47,6	40	CAG-603-ST-**/**-W1
		6090	1.50	1.87	1.57	
/ *replace with* ØB / ØA: 25/19 • 30/24 • 30/22 • 33,7/21 • 33,7/19,5 • 38/30 • 38/28						
32	1-1/4	420	44	54	45	CAG-604-ST-**/**-W1 [2]
		6090	1.73	2.13	1.77	
/ *replace with* ØB / ØA: 25/19 • 30/24 • 38/30 • 38/28 • 38/27 • 42,4/29,8						
38	1-1/2	420	51	63,5	50	CAG-605-ST-**/**-W1
		6090	2.01	2.50	1.97	
/ *replace with* ØB / ØA: 38/28 • 45/32 • 48,3/38,3 • 48,3/35,7 • 48,3/34 • 48,3/32,3 • 48,3/30,7 • 50/38 • 51/35						
51	2	420	67	79,4	58	CAG-606-ST-**/**-W1
		6090	2.64	3.13	2.28	
/ *replace with* ØB / ØA: 48,3/35,7 • 60,3/47,7 • 60,3/44,3 • 60,3/42,8 • 60,3/40,3 • 60,3/33,5 • 65 /39						
64	2-1/2	420	89	108	75	CAG-607-ST-**/**-W1
		6090	3.50	4.25	2.95	
/ *replace with* ØB / ØA: 76,1/60 • 76,1/56 • 89/69 • 89/67 • 89/60,5						
76	3	420	114	131,6	80	CAG-608-ST-**/**-W1
		6090	4.49	5.18	3.15	
/ *replace with* ØB / ØA: 89/69 • 89/66,7 • 89/60,5 • 114/92,3 • 114/79,3						

Please see Page 89 for separate Bolt Sets and Sealings.

[1] The maximum working pressure PN (bar/PSI) applies only to the flange itself and depends on the bolts used (Grade 10.9). The actual maximum working pressure depends on the thickness and the quality of the tube used.

[2] According to ISO 6162-2 bolts M12 should be used but because usually bolts M14 are used the description of the complete part must show M14 (e.g. CAG-604-ST-42.4/29.8-M14-W129-K).

Materials / Ordering Options / Examples

- * SAE Flange Adaptor (without O-ring) made of Steel S355J2 or equivalent, blank (oiled) — **CAG-...-ST-**/**-W1**
- * SAE Counterflange Adaptor made of Steel S355J2 or equivalent, blank (oiled) — **CSG-...-ST-**/**-W1**
- * SAE Flange Adaptor (without O-ring) made of Stainless Steel V4A – 1.4404 (on request) — **CAG-...-ST-**/**-W5**

- * Kit with DB including Metric bolts 10.9, spring rings, O-ring made of NBR (Buna-N®) — **CAG-...-ST-**/**-W129-K**
- * Kit with DB including Metric bolts 10.9, spring rings, O-ring made of FKM (Viton®) — **CAG-...-ST-**/**-V-W129-K**
- * Kit with DB including UNC bolts (Grade 8), spring rings, O-ring made of NBR (Buna-N®) — **CAG-...-ST-**/**-U-W129-K**
- * Kit with BM including Metric bolts 10.9, spring rings, O-ring made of NBR (Buna-N®) — **CAG-...-ST-**/**-BM-W129-K**

Please always indicate ØB / ØA.

B

SAE Socket-Weld Flange / Counterflange Adaptor
Type CAG/CSG-ES ▪ 3000 PSI Series

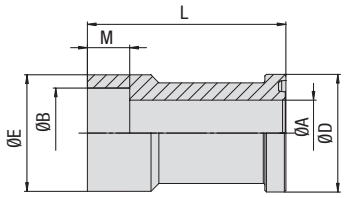

Version A (CAG) - not for use with SAE Flange Clamps BM

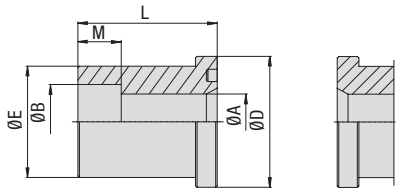

Version B (CAG / CSG)

3000 PSI Standard Pressure Series (according to ISO 6162-1:2012)

Nominal Size DN	(in)	PN[1] (bar/PSI) 10.9	Dimensions (mm/in) ØA	ØB	ØD	ØE	M	L	Version	Weight (kg/lbs) ca. per 100	Ordering Codes
13	1/2	350	12	16,5	30,2	24	12	35	B	11,0	CAG-301-ES-16.5/12-W1
		5075	.47	.65	1.19	.94	.47	1.38		24.20	
13	1/2	350	12	17,6	30,2	24	12	35	B	99,0	CAG-301-ES-17.6/12-W1
		5075	.47	.69	1.19	.94	.47	1.38		217.80	
13	1/2	350	15	20,5	30,2	30	13	60	A	15,7	CAG-301-ES-20.5/15-W1
		5075	.59	.81	1.19	1.18	.51	2.36		34.54	
13	1/2	350	15	21,7	30,2	30	13	60	A	15,8	CAG-301-ES-21.7/15-W1
		5075	.59	.85	1.19	1.18	.51	2.36		34.76	
19	3/4	350	13	20,5	38,1	31,5	12	40	B	18,4	CAG-302-ES-20.5/13-W1
		5075	.51	.81	1.50	1.24	.47	1.57		40.49	
19	3/4	350	13	21,7	38,1	31,5	13	40	B	18,4	CAG-302-ES-21.7/13-W1
		5075	.51	.85	1.50	1.24	.51	1.57		40.49	
19	3/4	350	19	25,5	38,1	35	13	68	A	28,2	CAG-302-ES-25.5/19-W1
		5075	.75	1.00	1.50	1.38	.51	2.68		62.04	
19	3/4	350	19	27,3	38,1	35	13	68	A	27,1	CAG-302-ES-27.3/19-W1
		5075	.75	1.07	1.50	1.38	.51	2.68		59.62	
25	1	320	19	27,3	44,45	38	14	45	B	40,0	CAG-303-ES-27.3/19-W1
		4641	.75	1.07	1.75	1.50	.55	1.77		88.00	
25	1	320	23	30,5	44,45	44	16	75	A	46,1	CAG-303-ES-30.5/23-W1
		4641	.91	1.20	1.75	1.73	.63	2.95		101.42	
25	1	320	25	34	44,45	44	16	75	A	46,0	CAG-303-ES-34/25-W1
		4641	.98	1.34	1.75	1.73	.63	2.95		101.20	
32	1-1/4	280	25	30,5	50,8	43	16	50	B	36,0	CAG-304-ES-30.5/25-W1
		4061	.98	1.20	2.00	1.69	.63	1.97		79.20	
32	1-1/4	280	25	34	50,8	43	16	50	B	32,0	CAG-304-ES-34/25-W1
		4061	.98	1.34	2.00	1.69	.63	1.97		70.40	
32	1-1/4	280	32	38,5	50,8	55	18	95	A	64,0	CAG-304-ES-38.5/32-W1
		4061	1.26	1.52	2.00	2.17	.71	3.74		140.80	
32	1-1/4	280	32	43	50,8	55	18	95	A	60,0	CAG-304-ES-43/32-W1
		4061	1.26	1.69	2.00	2.17	.71	3.74		132.00	
38	1-1/2	210	32	38,5	60,3	50	18	55	B	44,0	CAG-305-ES-38.5/32-W1
		3045	1.26	1.52	2.37	1.97	.71	2.17		96.80	
38	1-1/2	210	32	43	60,3	50	18	55	B	46,0	CAG-305-ES-43/32-W1
		3045	1.26	1.69	2.37	1.97	.71	2.17		101.20	
38	1-1/2	210	38	49	60,3	63	20	100	A	82,5	CAG-305-ES-49/38-W1
		3045	1.50	1.93	2.37	2.48	.79	3.94		181.50	
38	1-1/2	210	38	50,4	60,3	63	20	100	A	80,9	CAG-305-ES-50.4/38-W1
		3045	1.50	1.98	2.37	2.48	.79	3.94		177.98	
51	2	210	38	49	71,4	61,8	20	65	B	174,0	CAG-306-ES-49/38-W1
		3045	1.50	1.93	2.81	2.43	.79	2.56		382.80	
51	2	210	38	50,7	71,4	61,8	20	65	B	174,0	CAG-306-ES-50.7/38-W1
		3045	1.50	2.00	2.81	2.43	.79	2.56		382.80	
51	2	210	50	61	71,4	79	22	107	A	119,7	CAG-306-ES-61/50-W1
		3045	1.97	2.40	2.81	3.11	.87	4.21		263.34	

Please see Page 89 for separate Bolt Sets and Sealings.

Materials / Ordering Options / Examples

* SAE Flange Adaptor (without O-ring) made of Steel S355J2 or equivalent, blank (oiled) — **CAG-...-ES-**/**-W1**
* SAE Counterflange Adaptor made of Steel S355J2 or equivalent, blank (oiled) — **CSG-...-ES-**/**-W1**
* SAE Flange Adaptor (without O-ring) made of Stainless Steel V4A – 1.4404 (on request) — **CAG-...-ES-**/**-W5**

* Kit with DB including Metric bolts 10.9, spring rings, O-ring made of NBR (Buna-N®) — **CAG-...-ES-**/**-W129-K**
* Kit with DB including Metric bolts 10.9, spring rings, O-ring made of FKM (Viton®) — **CAG-...-ES-**/**-V-W129-K**
* Kit with DB including UNC bolts (Grade 8), spring rings, O-ring made of NBR (Buna-N®) — **CAG-...-ES-**/**-U-W129-K**

Please always indicate ØB / ØA.

[1] The maximum working pressure PN (bar/PSI) applies only to the flange itself and depends on the bolts used (Grade 10.9). The actual maximum working pressure depends on the thickness and the quality of the tube used.

SAE Socket-Weld Flange / Counterflange Adaptor
Type CAG/CSG-ES ▪ 3000 / 6000 PSI Series

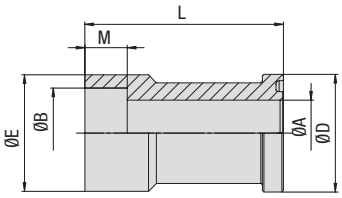

Version A (CAG) - not for use with SAE Flange Clamps BM

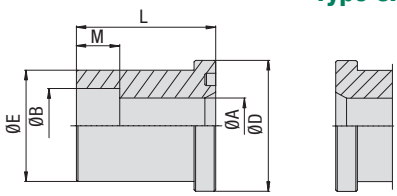

Version B (CAG / CSG)

B

3000 PSI Standard Pressure Series (according to ISO 6162-1:2012)

Nominal Size DN	(in)	PN[1] (bar/PSI) 10.9	Dimensions (mm/in) ØA	ØB	ØD	ØE	M	L	Version	Weight (kg/lbs) ca. per 100	Ordering Codes
64	2-1/2	175	47	61	84,1	73,8	22	75	B	79,0	CAG-307-ES-61/47-W1
		2538	1.85	2.40	3.31	2.91	.87	2.95		173.80	
64	2-1/2	175	58	77	84,1	98	24	130	A	215,9	CAG-307-ES-77/58-W1
		2538	2.28	3.03	3.31	3.86	.94	5.12		474.98	
76	3	160	58	77	101,6	90	24	85	B	108,0	CAG-308-ES-77/58-W1
		2320	2.28	3.03	4.00	3.54	.94	3.35		237.60	
76	3	160	70	90,5	101,6	116	28	150	A	372,0	CAG-308-ES-90.5/70-W1
		2320	2.76	3.56	4.00	4.57	1.10	5.91		818.40	

6000 PSI High Pressure Series (according to ISO 6162-2:2012)

Nominal Size DN	(in)	PN[1] (bar/PSI) 10.9	Dimensions (mm/in) ØA	ØB	ØD	ØE	M	L	Version	Weight (kg/lbs) ca. per 100	Ordering Codes
13	1/2	420	11	16,5	31,8	24	13	35	B	12,5	CAG-601-ES-16.5/11-W1
		6090	.43	.65	1.25	.94	.51	1.38		27.48	
13	1/2	420	11	17,6	31,8	24	13	35	B	12,5	CAG-601-ES-17.6/11-W1
		6090	.43	.69	1.25	.94	.51	1.38		27.48	
13	1/2	420	15	20,5	31,8	32	13	60	A	19,7	CAG-601-ES-20.5/15-W1
		6090	.59	.81	1.25	1.26	.51	2.36		43.34	
13	1/2	420	15	21,7	31,8	32	13	60	A	18,8	CAG-601-ES-21.7/15-W1
		6090	.59	.85	1.25	1.26	.51	2.36		41.36	
19	3/4	420	13	20,5	413	31,8	13	40	B	19,0	CAG-602-ES-20.5/13-W1
		6090	.51	.81	16.26	1.25	.51	1.57		41.80	
19	3/4	420	13	21,7	413	31,8	13	40	B	20,1	CAG-602-ES-20.5/15-W1
		6090	.51	.85	16.26	1.25	.51	1.57		44.22	
19	3/4	420	19	25,7	41,3	40	13	68	A	36,1	CAG-602-ES-25.5/19-W1
		6090	.75	1.01	1.63	1.57	.51	2.68		79.42	
19	3/4	420	19	27,3	41,3	40	13	68	A	35,4	CAG-602-ES-27.3/19-W1
		6090	.75	1.07	1.63	1.57	.51	2.68		77.88	
25	1	420	17,5	27,3	47,6	38	13	45	B	35,9	CAG-603-ES-27.3/17.5-W1
		6090	.69	1.07	1.87	1.50	.51	1.77		79.04	
25	1	420	25	34	47,6	48	16	75	A	48,0	CAG-603-ES-34/25-W1
		6090	.98	1.34	1.87	1.89	.63	2.95		105.60	
32	1-1/4	420	22	34	54	44	16	50	B	52,4	CAG-604-ES-34/22-W1 [2]
		6090	.87	1.34	2.13	1.73	.63	1.97		115.28	

Please see Page 89 for separate Bolt Sets and Sealings.

[1] The maximum working pressure PN (bar/PSI) applies only to the flange itself and depends on the bolts used (Grade 10.9). The actual maximum working pressure depends on the thickness and the quality of the tube used.

[2] According to ISO 6162-2 bolts M12 should be used. Since typically bolts M14 are used, the description of the complete part must show M14 (e.g. CAG-604-ES-34/22-M14-W129-K).

Materials / Ordering Options / Examples

* SAE Flange Adaptor (without O-ring) made of Steel S355J2 or equivalent, blank (oiled) — **CAG-...-ES-**/**-W1**
* SAE Counterflange Adaptor made of Steel S355J2 or equivalent, blank (oiled) — **CSG-...-ES-**/**-W1**
* SAE Flange Adaptor (without O-ring) made of Stainless Steel V4A – 1.4404 (on request) — **CAG-...-ES-**/**-W5**

* Kit with DB including Metric bolts 10.9, spring rings, O-ring made of NBR (Buna-N®) — **CAG-...-ES-**/**-W129-K**
* Kit with DB including Metric bolts 10.9, spring rings, O-ring made of FKM (Viton®) — **CAG-...-ES-**/**-V-W129-K**
* Kit with DB including UNC bolts (Grade 8), spring rings, O-ring made of NBR (Buna-N®) — **CAG-...-ES-**/**-U-W129-K**

Please always indicate ØB / ØA.

B

SAE Flange / Counterflange Adaptor with Male BSPT Thread
Type CAG/CSG-T ▪ 3000 PSI Series

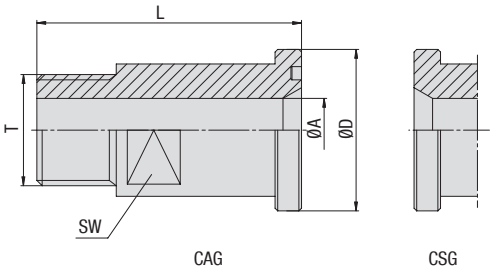

3000 PSI Standard Pressure Series (according to ISO 6162-1:2012)

Nominal Size DN	(in)	PN[1] (bar/PSI) 10.9	Dimensions (mm/in) ØA	ØD	L	SW	T (BSPT)	Weight (kg/lbs) ca. per 100	Ordering Codes
13	1/2	300	12	30,2	50	19	1/2	13,0	CAG-301-T-W66
		4350	.47	1.19	1.97	.75		28.60	
13	1/2	300	10	30,2	50	19	3/8 (06)	13,0	CAG-301-T06-W66
		4350	.39	1.19	1.97	.75		28.60	
19	3/4	300	17	38,1	55	27	3/4	18,2	CAG-302-T-W66
		4350	.67	1.50	2.17	1.06		40.04	
19	3/4	300	12	38,1	55	27	1/2 (08)	18,2	CAG-302-T08-W66
		4350	.47	1.50	2.17	1.06		40.04	
25	1	320	22	44,45	60	32	1	40,0	CAG-303-T-W66
		4641	.87	1.75	2.36	1.26		88.00	
25	1	320	17	44,45	60	32	3/4 (12)	40,0	CAG-303-T12-W66
		4641	.67	1.75	2.36	1.26		88.00	
32	1-1/4	280	27	50,8	65	41	1-1/4	43,7	CAG-304-T-W66
		4061	1.06	2.00	2.56	1.61		96.14	
32	1-1/4	280	22	50,8	65	41	1 (16)	44,0	CAG-304-T16-W66
		4061	.87	2.00	2.56	1.61		96.80	
38	1-1/2	210	32	60,3	70	46	1-1/2	61,5	CAG-305-T-W66
		3045	1.26	2.37	2.76	1.81		135.30	
38	1-1/2	210	27	60,3	70	46	1-1/4 (20)	61,5	CAG-305-T20-W66
		3045	1.06	2.37	2.76	1.81		135.30	
51	2	210	40	71,4	75	55	2	100,7	CAG-306-T-W66
		3045	1.57	2.81	2.95	2.17		221.54	
51	2	210	30	71,4	75	55	1-1/2 (24)	45,0	CAG-306-T24-W66
		3045	1.18	2.81	2.95	2.17		99.00	

Please see Page 89 for separate Bolt Sets and Sealings.

Materials / Ordering Options / Examples

* SAE Flange Adaptor (without O-ring) made of Steel S355J2 or equivalent, zinc-plated and thick-film-passivated **CAG-...-T-W66**
* SAE Counterflange Adaptor made of Steel S355J2 or equivalent, zinc-plated and thick-film-passivated **CSG-...-T-W66**
* SAE Flange Adaptor (without O-ring) made of Stainless Steel V4A – 1.4404 (on request) **CAG-...-T-W5**

* Size of connection thread deviating from the standard (e.g. 1/2 BSPT) **CAG-...-T08-W66**

* Kit with DB including Metric bolts 10.9, spring rings, O-ring made of NBR (Buna-N®) **CAG-...-T-W130-K**
* Kit with DB including Metric bolts 10.9, spring rings, O-ring made of FKM (Viton®) **CAG-...-T-V-W130-K**
* Kit with DB including UNC bolts (Grade 8), spring rings, O-ring made of NBR (Buna-N®) **CAG-...-T-U-W130-K**

[1] The maximum working pressure PN (bar/PSI) applies only to the flange itself and depends on the bolts used (Grade 10.9). The actual maximum working pressure depends on the thickness and the quality of the tube used.

SAE Flange / Counterflange Adaptor with Male BSPT Thread
Type CAG/CSG-BSPT ▪ 6000 PSI Series

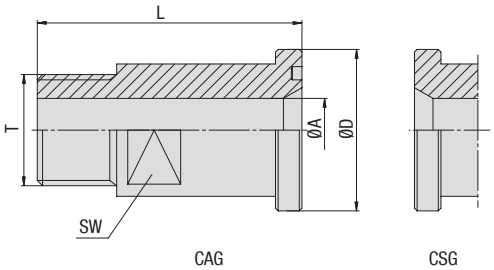

6000 PSI High Pressure Series (according to ISO 6162-2:2012)

Nominal Size DN	(in)	PN[1] (bar/PSI) 10.9	Dimensions (mm/in) ØA	ØD	L	SW	T (BSPT)	Weight (kg/lbs) ca. per 100	Ordering Codes
13	1/2	350	12	31,8	50	19	1/2	12,5	CAG-601-T-W66
		5075	.47	1.25	1.97	.75		27.48	
13	1/2	350	10	31,8	50	19	3/8 (06)	12,5	CAG-601-T06-W66
		5075	.39	1.25	1.97	.75		27.48	
19	3/4	350	17	41,3	60	26	3/4	23,4	CAG-602-T-W66
		5075	.67	1.63	2.36	1.02		51.51	
19	3/4	350	12	41,3	60	26	1/2 (08)	23,4	CAG-602-T08-W66
		5075	.47	1.63	2.36	1.02		51.51	
25	1	350	22	47,6	70	32	1	35,9	CAG-603-T-W66
		5075	.87	1.87	2.76	1.26		79.04	
25	1	350	17	47,6	70	32	3/4 (12)	35,9	CAG-603-T12-W66
		5075	.67	1.87	2.76	1.26		79.04	
32	1-1/4	250	27	54	75	36	1-1/4	52,4	CAG-604-T-W66 [2]
		3625	1.06	2.13	2.95	1.42		115.28	
32	1-1/4	250	22	54	75	36	1 (16)	52,4	CAG-604-T16-W66
		3625	.87	2.13	2.95	1.42		115.28	
38	1-1/2	250	30	63,5	80	41	1-1/2	76,0	CAG-605-T-W66
		3625	1.18	2.50	3.15	1.61		167.20	
38	1-1/2	250	27	63,5	80	41	1-1/4 (20)	76,0	CAG-605-T20-W66
		3625	1.06	2.50	3.15	1.61		167.20	
51	2	200	40	79,4	90	55	2	141,8	CAG-606-T-W66
		2900	1.57	3.13	3.54	2.17		311.96	
51	2	200	30	79,4	90	55	1-1/2 (24)	141,8	CAG-606-T24-W66
		2900	1.18	3.13	3.54	2.17		311.96	

Please see Page 89 for separate Bolt Sets and Sealings.

[1] The maximum working pressure PN (bar/PSI) applies only to the flange itself and depends on the bolts used (Grade 10.9). The actual maximum working pressure depends on the thickness and the quality of the tube used.

[2] According to ISO 6162-2 bolts M12 should be used but because usually bolts M14 are used the description of the complete part must show M14 (e.g. CAG-604-T-M14-W130-K).

Materials / Ordering Options / Examples

* SAE Flange Adaptor (without O-ring) made of Steel S355J2 or equivalent, zinc-plated and thick-film-passivated **CAG-...-T-W66**
* SAE Counterflange Adaptor made of Steel S355J2 or equivalent, zinc-plated and thick-film-passivated **CSG-...-T-W66**
* SAE Flange Adaptor (without O-ring) made of Stainless Steel V4A – 1.4404 (on request) **CAG-...-T-W5**

* Size of connection thread deviating from the standard (e.g. 1/2 BSPT) **CAG-...-T08-W66**

* Kit with DB including Metric bolts 10.9, spring rings, O-ring made of NBR (Buna-N®) **CAG-...-T-W130-K**
* Kit with DB including Metric bolts 10.9, spring rings, O-ring made of FKM (Viton®) **CAG-...-T-V-W130-K**
* Kit with DB including UNC bolts (Grade 8), spring rings, O-ring made of NBR (Buna-N®) **CAG-...-T-U-W130-K**

B

SAE Flange / Counterflange Adaptor with Male NPT Thread
Type CAG/CSG-N ▪ 3000 PSI Series

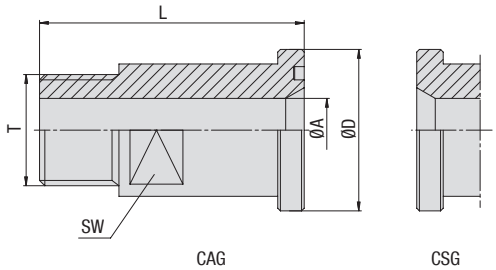

3000 PSI Standard Pressure Series (according to ISO 6162-1:2012)

Nominal Size DN	(in)	PN[1] (bar/PSI) 10.9	Dimensions (mm/in) ØA	ØD	L	SW	T (NPT)	Weight (kg/lbs) ca. per 100	Ordering Codes
13	1/2	300	12	30,2	50	19	1/2	13,0	CAG-301-N-W66
		4350	.47	1.19	1.97	.75		28.60	
13	1/2	300	10	30,2	50	19	3/8 (06)	13,0	CAG-301-N06-W66
		4350	.39	1.19	1.97	.75		28.60	
19	3/4	300	17	38,1	55	27	3/4	23,0	CAG-302-N-W66
		4350	.67	1.50	2.17	1.06		50.60	
19	3/4	300	12	38,1	55	27	1/2 (08)	23,0	CAG-302-N08-W66
		4350	.47	1.50	2.17	1.06		50.60	
25	1	320	22	44,45	60	32	1	28,0	CAG-303-N-W66
		4641	.87	1.75	2.36	1.26		61.60	
25	1	320	17	44,45	60	32	3/4 (12)	28,0	CAG-303-N12-W66
		4641	.67	1.75	2.36	1.26		61.60	
32	1-1/4	280	27	50,8	65	41	1-1/4	79,0	CAG-304-N-W66
		4061	1.06	2.00	2.56	1.61		173.80	
32	1-1/4	280	22	50,8	65	41	1 (16)	79,0	CAG-304-N16-W66
		4061	.87	2.00	2.56	1.61		173.80	
38	1-1/2	210	32	60,3	70	46	1-1/2	62,0	CAG-305-N-W66
		3045	1.26	2.37	2.76	1.81		136.40	
38	1-1/2	210	27	60,3	70	46	1-1/4 (20)	62,0	CAG-305-N20-W66
		3045	1.06	2.37	2.76	1.81		136.40	
51	2	210	40	71,4	75	55	2	95,8	CAG-306-N-W66
		3045	1.57	2.81	2.95	2.17		210.76	
51	2	210	30	71,4	75	55	1-1/2 (24)	171,6	CAG-306-N24-W66
		3045	1.18	2.81	2.95	2.17		377.52	

Please see Page 89 for separate Bolt Sets and Sealings.

Materials / Ordering Options / Examples

* SAE Flange Adaptor (without O-ring) made of Steel S355J2 or equivalent, zinc-plated and thick-film-passivated **CAG-...-N-W66**
* SAE Counterflange Adaptor made of Steel S355J2 or equivalent, zinc-plated and thick-film-passivated **CSG-...-N-W66**
* SAE Flange Adaptor (without O-ring) made of Stainless Steel V4A – 1.4404 (on request) **CAG-...-N-W5**

* Size of connection thread deviating from the standard (e.g. 1/2 NPT) **CAG-...-N08-W66**

* Kit with DB including Metric bolts 10.9, spring rings, O-ring made of NBR (Buna-N®) **CAG-...-N-W130-K**
* Kit with DB including Metric bolts 10.9, spring rings, O-ring made of FKM (Viton®) **CAG-...-N-V-W130-K**
* Kit with DB including UNC bolts (Grade 8), spring rings, O-ring made of NBR (Buna-N®) **CAG-...-N-U-W130-K**

[1] The maximum working pressure PN (bar/PSI) applies only to the flange itself and depends on the bolts used (Grade 10.9). The actual maximum working pressure depends on the thickness and the quality of the tube used.

SAE Flange Adaptor / Counterflange with Male NPT Thread
Type CAG/CSG-NPT ▪ 6000 PSI Series

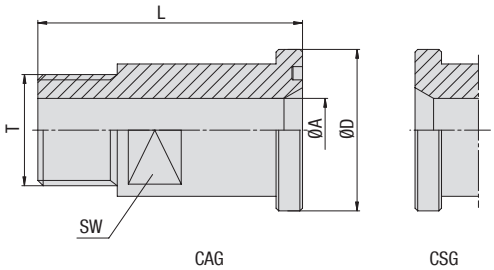

6000 PSI High Pressure Series (according to ISO 6162-2:2012)

Nominal Size DN	(in)	PN[1] (bar/PSI) 10.9	Dimensions (mm/in) ØA	ØD	L	SW	T (NPT)	Weight (kg/lbs) ca. per 100	Ordering Codes
13	1/2	350	12	31,8	50	19	1/2	13,0	CAG-601-N-W66
		5075	.47	1.25	1.97	.75		28.60	
13	1/2	350	10	31,8	50	19	3/8 (06)	13,0	CAG-601-N06-W66
		5075	.39	1.25	1.97	.75		28.60	
19	3/4	350	17	41,3	60	26	3/4	23,0	CAG-602-N-W66
		5075	.67	1.63	2.36	1.02		50.60	
19	3/4	350	12	41,3	60	26	1/2 (08)	23,0	CAG-602-N08-W66
		5075	.47	1.63	2.36	1.02		50.60	
25	1	350	22	47,6	70	32	1	55,6	CAG-603-N-W66
		5075	.87	1.87	2.76	1.26		122.32	
25	1	350	17	47,6	70	32	3/4 (12)	55,6	CAG-604-N12-W66
		5075	.67	1.87	2.76	1.26		122.32	
32	1-1/4	250	27	54	75	36	1-1/4	56,6	CAG-604-N-W66 [2]
		3625	1.06	2.13	2.95	1.42		124.46	
32	1-1/4	250	22	54	75	36	1 (16)	56,6	CAG-604-N16-W66
		3625	.87	2.13	2.95	1.42		124.46	
38	1-1/2	250	30	63,5	80	41	1-1/2	76,7	CAG-605-N-W66
		3625	1.18	2.50	3.15	1.61		168.74	
38	1-1/2	250	27	63,5	80	41	1-1/4 (20)	83,2	CAG-605-N20-W66
		3625	1.06	2.50	3.15	1.61		183.03	
51	2	200	40	79,4	90	55	2	174,6	CAG-606-N-W66
		2900	1.57	3.13	3.54	2.17		384.12	
51	2	200	30	79,4	90	55	1-1/2 (24)	174,6	CAG-606-N24-W66
		2900	1.18	3.13	3.54	2.17		384.12	

Please see Page 89 for separate Bolt Sets and Sealings.

[1] The maximum working pressure PN (bar/PSI) applies only to the flange itself and depends on the bolts used (Grade 10.9). The actual maximum working pressure depends on the thickness and the quality of the tube used.

[2] According to ISO 6162-2 bolts M12 should be used but because usually bolts M14 are used the description of the complete part must show M14 (e.g. CAG-604-N-M14-W130-K).

Materials / Ordering Options / Examples

* SAE Flange Adaptor (without O-ring) made of Steel S355J2 or equivalent, zinc-plated and thick-film-passivated **CAG-...-N-W66**
* SAE Counterflange Adaptor made of Steel S355J2 or equivalent, zinc-plated and thick-film-passivated **CSG-...-N-W66**
* SAE Flange Adaptor (without O-ring) made of Stainless Steel V4A – 1.4404 (on request) **CAG-...-N-W5**

* Size of connection thread deviating from the standard (e.g. 1/2 NPT) **CAG-...-N08-W66**

* Kit with DB including Metric bolts 10.9, spring rings, O-ring made of NBR (Buna-N®) **CAG-...-N-W130-K**
* Kit with DB including Metric bolts 10.9, spring rings, O-ring made of FKM (Viton®) **CAG-...-N-V-W130-K**
* Kit with DB including UNC bolts (Grade 8), spring rings, O-ring made of NBR (Buna-N®) **CAG-...-N-U-W130-K**

B

SAE Flange Adaptor with Male Metric Thread and 24° Conical Bore (acc. to ISO 8434-1)
Type CAG-L/S ▪ 3000 PSI Series

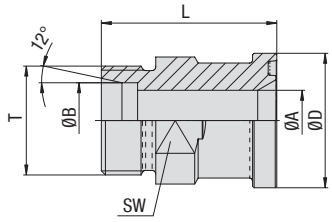

3000 PSI Standard Pressure Series (according to ISO 6162-1:2012)

Nominal Size DN	(in)	PN[1] (bar/PSI) 10.9	Dimensions (mm/in) ØA	ØB	Series	ØD	L	SW	T (Metric)	Weight (kg/lbs) ca. per 100	Ordering Codes
13	1/2	350	12	15	L	30,2	48	24	22x1,5	12,6	CAG-301-15L-W66
		5075	.47	.59		1.19	1.89	.94		27.72	
13	1/2	350	12	16	S	30,2	50	24	24x1,5	13,0	CAG-301-16S-W66
		5075	.47	.63		1.19	1.97	.94		28.60	
19	3/4	350	15	18	L	38,1	53	30	26x1,5	23,1	CAG-302-18L-W66
		5075	.59	.71		1.50	2.09	1.18		50.71	
19	3/4	350	16	20	S	38,1	57	30	30x2	24,2	CAG-302-20S-W66
		5075	.63	.79		1.50	2.24	1.18		53.24	
19	3/4	250	19	22	L	38,1	53	30	30x2	20,1	CAG-302-22L-W66
		3625	.75	.87		1.50	2.09	1.18		44.11	
19	3/4	350	17	25	S	38,1	57	30	36x2	25,6	CAG-302-25S-W66
		5075	.67	.98		1.50	2.24	1.18		56.36	
19	3/4	160	19	28	L	38,1	53	30	36x2	21,7	CAG-302-28L-W66
		2320	.75	1.10		1.50	2.09	1.18		47.81	
25	1	320	20	25	S	44,45	58	36	36x2	34,5	CAG-303-25S-W66
		4641	.79	.98		1.75	2.28	1.42		75.90	
25	1	250	24	28	L	44,45	54	36	36x2	28,3	CAG-303-28L-W66
		3625	.94	1.10		1.75	2.13	1.42		62.26	
25	1	320	24	30	S	44,45	63	36	42x2	35,2	CAG-303-30S-W66
		4641	.94	1.18		1.75	2.48	1.42		77.44	
32	1-1/4	280	20	25	S	50,8	60	41	36x2	46,6	CAG-304-25S-W66
		4061	.79	.98		2.00	2.36	1.61		102.52	
32	1-1/4	250	22	28	L	50,8	59	41	36x2	43,5	CAG-304-28L-W66
		3625	.87	1.10		2.00	2.32	1.61		95.80	
32	1-1/4	280	25	30	S	50,8	62	41	42x2	44,8	CAG-304-30S-W66
		4061	.98	1.18		2.00	2.44	1.61		98.56	
32	1-1/4	250	30	35	L	50,8	58	41	45x2	35,9	CAG-304-35L-W66
		3625	1.18	1.38		2.00	2.28	1.61		78.98	
32	1-1/4	280	28	38	S	50,8	67	46	52x2	54,4	CAG-304-38S-W66
		4061	1.10	1.50		2.00	2.64	1.81		119.68	
38	1-1/2	210	32	38	S	60,35	70	46	52x2	62,3	CAG-305-38S-W66
		3045	1.26	1.50		2.38	2.76	1.81		137.06	
38	1-1/2	210	36	42	L	60,35	64	46	52x2	47,7	CAG-305-42L-W66
		3045	1.42	1.65		2.38	2.52	1.81		104.90	

Please see Page 89 for separate Bolt Sets and Sealings.

Materials / Ordering Options / Examples

* SAE Flange Adaptor (without O-ring) made of Steel S355J2 or equivalent, zinc-plated and thick-film-passivated **CAG-...-...-W66**
* SAE Flange Adaptor (without O-ring) made of Steel S355J2 / C45 or equivalent, zinc/nickel-plated (on request) **CAG-...-...-W3**
* SAE Flange Adaptor (without O-ring) made of Stainless Steel V4A – 1.4571 (on request) **CAG-...-...-W5**

* Kit with DB including Metric bolts 10.9, spring rings, O-ring made of NBR (Buna-N®) **CAG-...-...-W130-K**
* Kit with DB including Metric bolts 10.9, spring rings, O-ring made of FKM (Viton®) **CAG-...-...-V-W130-K**
* Kit with DB including UNC bolts (Grade 8), spring rings, O-ring made of NBR (Buna-N®) **CAG-...-...-U-W130-K**

Please always indicate ØB and Series.

[1] The maximum working pressure PN (bar/PSI) applies only to the flange itself and depends on the bolts used (Grade 10.9). The actual maximum working pressure depends on the thickness and the quality of the tube used.

SAE Flange Adaptor with Male Metric Thread and 24° Conical Bore (acc. to ISO 8434-1)
Type CAG-L/S ▪ 6000 PSI Series

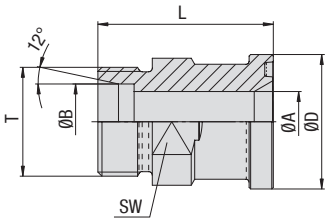

B

6000 PSI High Pressure Series (according to ISO 6162-2:2012)

Nominal Size		PN[1] (bar/PSI)	Dimensions (mm/in)							Weight (kg/lbs) ca.	Ordering Codes
DN	(in)	10.9	ØA	ØB	Series	ØD	L	SW	T (Metric)	per 100	
13	1/2	420	12	16	S	31,8	53	24	24x1,5	1,5	CAG-601-16S-W66
		6090	.47	.63		1.25	2.09	.94		3.30	
19	3/4	420	12	16	S	41,3	59	30	24x1,5	29,5	CAG-602-16S-W66
		6090	.47	.63		1.63	2.32	1.18		64.90	
19	3/4	400	16	20	S	41,3	61	30	30x2	28,5	CAG-602-20S-W66
		5800	.63	.79		1.63	2.40	1.18		62.74	
19	3/4	400	17	25	S	41,3	63	30	36x2	30,4	CAG-602-25S-W66
		5800	.67	.98		1.63	2.48	1.18		66.84	
19	3/4	400	18	30	S	41,3	64	36	42x2	36,8	CAG-602-30S-W66
		5800	.71	1.18		1.63	2.52	1.42		80.96	
25	1	400	20	25	S	47,6	72	36	36x2	49,8	CAG-603-25S-W66
		5800	.79	.98		1.87	2.83	1.42		109.56	
25	1	400	24	30	S	47,6	74	36	42x2	47,7	CAG-603-30S-W66
		5800	.94	1.18		1.87	2.91	1.42		104.94	
32	1-1/4	400	25	30	S	54	79	41	42x2	62,1	CAG-604-30S-W66 [2]
		5800	.98	1.18		2.13	3.11	1.61		136.62	
32	1-1/4	400	30	38	S	54	83	46	52x2	66,1	CAG-604-38S-W66 [2]
		5800	1.18	1.50		2.13	3.27	1.81		145.42	
38	1-1/2	400	30	38	S	63,5	89	46	52x2	92,2	CAG-605-38S-W66
		5800	1.18	1.50		2.50	3.50	1.81		202.77	

Please see Page 89 for separate Bolt Sets and Sealings.

[1] The maximum working pressure PN (bar/PSI) applies only to the flange itself and depends on the bolts used (Grade 10.9). The actual maximum working pressure depends on the thickness and the quality of the tube used.

[2] According to ISO 6162-2 bolts M12 should be used but because usually bolts M14 are used the description of the complete part must show M14 (e.g. CAG-604-30S-M14-W130-K).

Materials / Ordering Options / Examples

* SAE Flange Adaptor (without O-ring) made of Steel S355J2 or equivalent, zinc-plated and thick-film-passivated **CAG-...-...-W66**
* SAE Flange Adaptor (without O-ring) made of Steel S355J2 / C45 or equivalent, zinc/nickel-plated (on request) **CAG-...-...-W3**
* SAE Flange Adaptor (without O-ring) made of Stainless Steel V4A – 1.4571 (on request) **CAG-...-...-W5**

* Kit with DB including Metric bolts 10.9, spring rings, O-ring made of NBR (Buna-N®) **CAG-...-...-W130-K**
* Kit with DB including Metric bolts 10.9, spring rings, O-ring made of FKM (Viton®) **CAG-...-...-V-W130-K**
* Kit with DB including UNC bolts (Grade 8), spring rings, O-ring made of NBR (Buna-N®) **CAG-...-...-U-W130-K**

Please always indicate ØB and Series.

B

SAE 90° Butt-Weld Flange Adaptor
Type CAG90-ST ▪ 3000 PSI Series

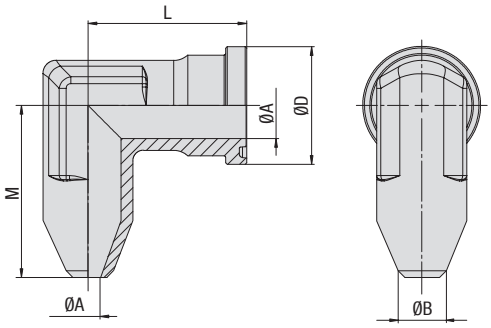

3000 PSI Standard Pressure Series (according to ISO 6162-1:2012)

Nominal Size		PN[1] (bar/PSI)	Dimensions (mm/in)					Weight (kg/lbs) ca.	Ordering Codes
DN	(in)	10.9	ØA	ØB	ØD	L	M	per 100	
13	1/2	350	11	15	30,2	39	38	16,0	CAG90-301-ST-15/11-W1
		5075	.43	.59	1.19	1.54	1.50	35.20	
13	1/2	350	12	16	30,2	39	38	17,9	CAG90-301-ST-16/12-W1
		5075	.47	.63	1.19	1.54	1.50	39.34	
13	1/2	350	14	21,3	30,2	39	38	17,0	CAG90-301-ST-21.3/14-W1
		5075	.55	.84	1.19	1.54	1.50	37.40	
19	3/4	350	15	18	38,1	42	45	66,0	CAG90-302-ST-18/15-W1
		5075	.59	.71	1.50	1.65	1.77	145.20	
19	3/4	350	14	20	38,1	42	45	35,4	CAG90-302-ST-20/14-W1
		5075	.55	.79	1.50	1.65	1.77	77.96	
19	3/4	350	16	22	38,1	42	45	29,0	CAG90-302-ST-22/16-W1
		5075	.63	.87	1.50	1.65	1.77	63.80	
19	3/4	350	19	26,9	38,1	42	45	30,0	CAG90-302-ST-26.9/19-W1
		5075	.75	1.06	1.50	1.65	1.77	66.00	
25	1	320	19	25	44,45	45	50	82,1	CAG90-303-ST-25/19-W1
		4641	.75	.98	1.75	1.77	1.97	180.62	
25	1	320	22	30	44,45	45	50	50,3	CAG90-303-ST-30/22-W1
		4641	.87	1.18	1.75	1.77	1.97	110.66	
25	1	320	25	33,7	44,45	45	50	41,0	CAG90-303-ST-33.7/25-W1
		4641	.98	1.33	1.75	1.77	1.97	90.20	
32	1-1/4	280	19	25	50,8	50	59	117,2	CAG90-304-ST-25/19-W1
		4061	.75	.98	2.00	1.97	2.32	257.84	
32	1-1/4	280	22	30	50,8	50	59	35,0	CAG90-304-ST-30/22-W1
		4061	.87	1.18	2.00	1.97	2.32	77.00	
32	1-1/4	280	31	35	50,8	50	59	52,4	CAG90-304-ST-35/31-W1
		4061	1.22	1.38	2.00	1.97	2.32	115.28	
32	1-1/4	280	28	38	50,8	50	59	97,0	CAG90-304-ST-38/28-W1
		4061	1.10	1.50	2.00	1.97	2.32	213.40	
32	1-1/4	280	32	42,4	50,8	50	59	71,0	CAG90-304-ST-42.4/32-W1
		4061	1.26	1.67	2.00	1.97	2.32	156.20	
38	1-1/2	210	28	38	60,35	76	56	75,0	CAG90-305-ST-38/28-W1
		3045	1.10	1.50	2.38	2.99	2.20	165.00	
38	1-1/2	210	36	42	60,35	76	56	70,9	CAG90-305-ST-42/36-W1
		3045	1.42	1.65	2.38	2.99	2.20	155.98	
38	1-1/2	210	38	48,3	60,35	76	56	65,0	CAG90-305-ST-48.3/38-W1
		3045	1.50	1.90	2.38	2.99	2.20	143.00	

Please see Page 89 for separate Bolt Sets and Sealings.

Materials / Ordering Options / Examples

* SAE Flange Adaptor (without O-ring) made of Steel S355J2 or equivalent, blank (oiled) **CAG90-...-ST-**/**-W1**
* SAE Flange Adaptor (without O-ring) made of Stainless Steel V4A – 1.4404 (on request) **CAG90-...-ST-**/**-W5**

* Kit with DB including Metric bolts 10.9, spring rings, O-ring made of NBR (Buna-N®) **CAG90-...-ST-**/**-W129-K**
* Kit with DB including Metric bolts 10.9, spring rings, O-ring made of FKM (Viton®) **CAG90-...-ST-**/**-V-W129-K**
* Kit with DB including UNC bolts (Grade 8), spring rings, O-ring made of NBR (Buna-N®) **CAG90-...-ST-**/**-U-W129-K**

Please always indicate ØB / ØA.

[1] The maximum working pressure PN (bar/PSI) applies only to the flange itself and depends on the bolts used (Grade 10.9). The actual maximum working pressure depends on the thickness and the quality of the tube used.

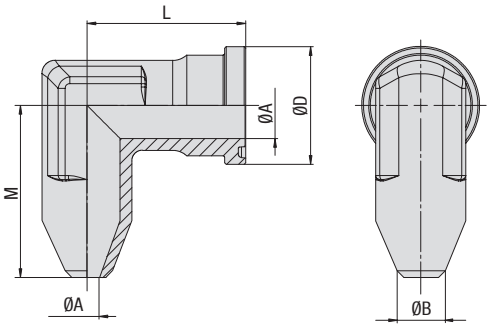

SAE 90° Butt-Weld Flange Adaptor
Type CAG90-ST ▪ 6000 PSI Series

6000 PSI High Pressure Series (according to ISO 6162-2:2012)

Nominal Size DN	(in)	PN[1] (bar/PSI) 10.9	Dimensions (mm/in) ØA	ØB	ØD	L	M	Weight (kg/lbs) ca. per 100	Ordering Codes
13	1/2	420	10	16	31,8	39	38	20,7	CAG90-601-ST-16/10-W1
		6090	.39	.63	1.25	1.54	1.50	45.54	
13	1/2	420	12	21,3	31,8	39	38	20,7	CAG90-601-ST-21.3/12-W1
		6090	.47	.84	1.25	1.54	1.50	45.54	
19	3/4	420	10	16	41,3	48	48	89,5	CAG90-602-ST-16/10-W1
		6090	.39	.63	1.63	1.89	1.89	196.90	
19	3/4	420	12	20	41,2	48	48	46,0	CAG90-602-ST-20/12-W1
		6090	.47	.79	1.62	1.89	1.89	101.15	
19	3/4	420	17	25	41,3	48	48	43,1	CAG90-602-ST-25/17-W1
		6090	.67	.98	1.63	1.89	1.89	94.82	
19	3/4	420	16	26,9	41,3	48	48	43,6	CAG90-602-ST-26.9/16-W1
		6090	.63	1.06	1.63	1.89	1.89	95.92	
25	1	420	17	25	47,6	60	60	73,0	CAG90-603-ST-25/17-W1
		6090	.67	.98	1.87	2.36	2.36	160.60	
25	1	420	22	60	47,6	60	60	74,9	CAG90-603-ST-30/22-W1
		6090	.87	1.18	1.87	2.36	2.36	164.78	
25	1	420	25	33,7	47,6	60	60	63,0	CAG90-603-ST-33.7/25-W1
		6090	.98	1.33	1.87	2.36	2.36	138.60	
25	1	420	21	33,7	47,6	60	60	69,1	CAG90-603-ST-33.7/21-W1
		6090	.83	1.33	1.87	2.36	2.36	152.02	
32	1-1/4	420	22	60	54	68	68	89,0	CAG90-604-ST-30/22-W1 [2]
		6090	.87	1.18	2.13	2.68	2.68	195.80	
32	1-1/4	420	28	38	54	68	68	94,3	CAG90-604-ST-38/28-W1 [2]
		6090	1.10	1.50	2.13	2.68	2.68	207.46	
32	1-1/4	420	60	42,4	54	68	68	92,1	CAG90-604-ST-42.4/30-W1 [2]
		6090	1.18	1.67	2.13	2.68	2.68	202.62	
32	1-1/4	420	22	38	54	68	68	109,4	CAG90-604-ST-38/22-W1 [2]
		6090	.87	1.50	2.13	2.68	2.68	240.68	
38	1-1/2	420	28	38	63,5	76	76	167,2	CAG90-605-ST-38/28-W1
		6090	1.10	1.50	2.50	2.99	2.99	367.84	
38	1-1/2	420	22	38	63,5	76	76	146,6	CAG90-605-ST-38/22-W1
		6090	.87	1.50	2.50	2.99	2.99	322.52	
38	1-1/2	420	34	48,3	63,6	76	76	148,6	CAG90-605-ST-48.3/34-W1
		6090	1.34	1.90	2.50	2.99	2.99	326.92	
38	1-1/2	420	32	48,3	63,5	76	76	148,6	CAG90-605-ST-48.3/32-W1
		6090	1.26	1.90	2.50	2.99	2.99	326.92	

Please see Page 89 for separate Bolt Sets and Sealings.

[1] The maximum working pressure PN (bar/PSI) applies only to the flange itself and depends on the bolts used (Grade 10.9). The actual maximum working pressure depends on the thickness and the quality of the tube used.

[2] According to ISO 6162-2 bolts M12 should be used but because usually bolts M14 are used the description of the complete part must show M14 (CAG90-604-ST-30/22-M14-W129-K).

Materials / Ordering Options / Examples

* SAE Flange Adaptor (without O-ring) made of Steel S355J2 or equivalent, blank (oiled) **CAG90-...-ST-**/**-W1**
* SAE Flange Adaptor (without O-ring) made of Stainless Steel V4A – 1.4404 (on request) **CAG90-...-ST-**/**-W5**

* Kit with DB including Metric bolts 10.9, spring rings, O-ring made of NBR (Buna-N®) **CAG90-...-ST-**/**-W129-K**
* Kit with DB including Metric bolts 10.9, spring rings, O-ring made of FKM (Viton®) **CAG90-...-ST-**/**-V-W129-K**
* Kit with DB including UNC bolts (Grade 8), spring rings, O-ring made of NBR (Buna-N®) **CAG90-...-ST-**/**-U-W129-K**

Please always indicate ØB / ØA.

B

SAE 90° Flange Adaptor with Male Metric Thread and 24° Conical Bore (acc. to ISO 8434-1)
Type CAG90-L/S ▪ 3000 PSI Series

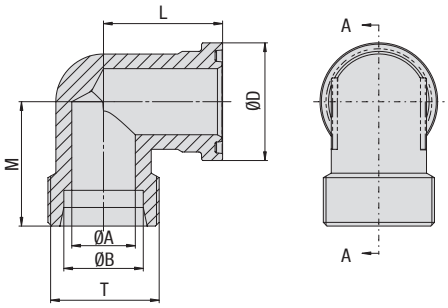

3000 PSI Standard Pressure Series (according to ISO 6162-1:2012)

Nominal Size DN	(in)	PN[1] (bar/PSI) 10.9	Dimensions (mm/in) ØA	ØB	Series	ØD	L	M	T (Metric)	Weight (kg/lbs) ca. per 100	Ordering Codes
13	1/2	350	12	15	L	30,2	39	36	22x1,5	16,4	CAG90-301-15L-W66
		5075	.47	.59		1.19	1.54	1.42		36.08	
13	1/2	350	12	16	S	30,2	39	38	24x1,5	17,2	CAG90-301-16S-W66
		5075	.47	.63		1.19	1.54	1.50		37.84	
19	3/4	350	15	18	L	38,1	42	39	26x1,5	30,2	CAG90-302-18L-W66
		5075	.59	.71		1.50	1.65	1.54		66.44	
19	3/4	350	16	20	S	38,1	42	43	30x2	33,4	CAG90-302-20S-W66
		5075	.63	.79		1.50	1.65	1.69		73.48	
19	3/4	250	19	22	L	38,1	42	41	30x2	28,8	CAG90-302-22L-W66
		3625	.75	.87		1.50	1.65	1.61		63.36	
19	3/4	350	17	25	S	38,1	42	45	36x2	35,6	CAG90-302-25S-W66
		5075	.67	.98		1.50	1.65	1.77		78.32	
25	1	320	20	25	S	44,45	45	48,5	36x2	52,3	CAG90-303-25S-W66
		4641	.79	.98		1.75	1.77	1.91		115.06	
25	1	250	24	28	L	44,45	45	45,5	36x2	40,7	CAG90-303-28L-W66
		3625	.94	1.10		1.75	1.77	1.79		89.54	
25	1	320	24	30	S	44,45	45	50	42x2	47,2	CAG90-303-30S-W66
		4641	.94	1.18		1.75	1.77	1.97		103.84	
32	1-1/4	280	20	25	S	50,8	50	55	36x2	70,8	CAG90-304-25S-W66
		4061	.79	.98		2.00	1.97	2.17		155.76	
32	1-1/4	280	25	30	S	50,8	50	57	42x2	67,5	CAG90-304-30S-W66
		4061	.98	1.18		2.00	1.97	2.24		148.50	
32	1-1/4	250	30	38	L	50,8	50	57	45x2	56,5	CAG90-304-35L-W66
		3625	1.18	1.50		2.00	1.97	2.24		124.30	
32	1-1/4	280	28	38	S	50,8	50	59	52x2	71,5	CAG90-304-38S-W66
		4061	1.10	1.50		2.00	1.97	2.32		157.30	
38	1-1/2	210	32	38	S	60,35	55	64	52x2	138,4	CAG90-305-38S-W66
		3045	1.26	1.50		2.38	2.17	2.52		304.48	
38	1-1/2	210	36	42	L	60,35	55	58	52x2	75,4	CAG90-305-42L-W66
		3045	1.42	1.65		2.38	2.17	2.28		165.93	

Please see Page 89 for separate Bolt Sets and Sealings.

Materials / Ordering Options / Examples

* SAE Flange Adaptor (without O-ring) made of Steel S355J2 or equivalent, zinc-plated and thick-film-passivated **CAG90-...-...-W66**
* SAE Flange Adaptor (without O-ring) made of Steel S355J2 / C45 or equivalent, zinc/nickel-plated (on request) **CAG90-...-...-W3**
* SAE Flange Adaptor (without O-ring) made of Stainless Steel V4A – 1.4404 (on request) **CAG90-...-...-W5**

* Kit with DB including Metric bolts 10.9, spring rings, O-ring made of NBR (Buna-N®) **CAG90-...-...-W130-K**
* Kit with DB including Metric bolts 10.9, spring rings, O-ring made of FKM (Viton®) **CAG90-...-...-V-W130-K**
* Kit with DB including UNC bolts (Grade 8), spring rings, O-ring made of NBR (Buna-N®) **CAG90-...-...-U-W130-K**

Please always indicate ØB and Series.

[1] The maximum working pressure PN (bar/PSI) applies only to the flange itself and depends on the bolts used (Grade 10.9). The actual maximum working pressure depends on the thickness and the quality of the tube used.

B

SAE 90° Flange Adaptor with Male Metric Thread and 24° Conical Bore (acc. to ISO 8434-1)
Type CAG90-L/S ▪ 6000 PSI Series

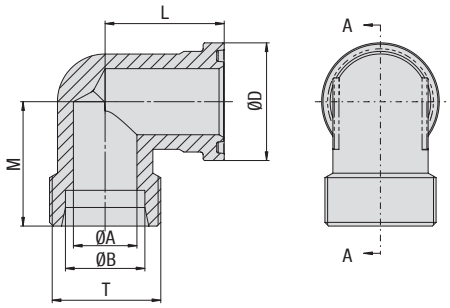

6000 PSI High Pressure Series (according to ISO 6162-2:2012)

Nominal Size		PN[1] (bar/PSI)	Dimensions (mm/in)							Weight (kg/lbs) ca.	Ordering Codes
DN	(in)	10.9	ØA	ØB		ØD	L	M	T (Metric)	per 100	
13	1/2	420	12	16	S	31,8	39	37,9	24x1,5	18,9	CAG90-601-16S-W66
		6090	.47	.63		1.25	1.54	1.49		41.58	
19	3/4	420	12	16	S	41,3	48	45	24x1,5	42,3	CAG90-602-16S-W66
		6090	.47	.63		1.63	1.89	1.77		93.06	
19	3/4	400	16	20	S	41,3	48	46	30x2	43,0	CAG90-602-20S-W66
		5800	.63	.79		1.63	1.89	1.81		94.60	
19	3/4	400	17	25	S	41,3	48	48	36x2	43,6	CAG90-602-25S-W66
		5800	.67	.98		1.63	1.89	1.89		95.92	
25	1	400	20	25	S	47,6	60	53	36x2	73,4	CAG90-603-25S-W66
		5800	.79	.98		1.87	2.36	2.09		161.48	
25	1	400	24	30	S	47,6	60	55	42x2	63,2	CAG90-603-30S-W66
		5800	.94	1.18		1.87	2.36	2.17		139.04	
32	1-1/4	400	25	30	S	54	68	58	42x2	89,3	CAG90-604-30S-W66 [2]
		5800	.98	1.18		2.13	2.68	2.28		196.46	
32	1-1/4	400	30	38	S	54	68	61	52x2	88,7	CAG90-604-38S-W66 [2]
		5800	1.18	1.50		2.13	2.68	2.40		195.14	
38	1-1/2	400	25	30	S	63,5	76	72	42x2	177,2	CAG90-605-30S-W66
		5800	.98	1.18		2.50	2.99	2.83		389.84	
38	1-1/2	400	30	38	S	63,5	76	72	52x2	147,1	CAG90-605-38S-W66
		5800	1.18	1.50		2.50	2.99	2.83		323.62	

Please see Page 89 for separate Bolt Sets and Sealings.

[1] The maximum working pressure PN (bar/PSI) applies only to the flange itself and depends on the bolts used (Grade 10.9). The actual maximum working pressure depends on the thickness and the quality of the tube used.

[2] According to ISO 6162-2 bolts M12 should be used but because usually bolts M14 are used the description of the complete part must show M14 (e.g. CAG90-604-30S-M14-W130-K).

Materials / Ordering Options / Examples

* SAE Flange Adaptor (without O-ring) made of Steel S355J2 or equivalent, zinc-plated and thick-film-passivated **CAG90-...-...-W66**
* SAE Flange Adaptor (without O-ring) made of Steel S355J2 / C45 or equivalent, zinc/nickel-plated (on request) **CAG90-...-...-W3**
* SAE Flange Adaptor (without O-ring) made of Stainless Steel V4A – 1.4404 (on request) **CAG90-...-...-W5**

* Kit with DB including Metric bolts 10.9, spring rings, O-ring made of NBR (Buna-N®) **CAG90-...-...-W130-K**
* Kit with DB including Metric bolts 10.9, spring rings, O-ring made of FKM (Viton®) **CAG90-...-...-V-W130-K**
* Kit with DB including UNC bolts (Grade 8), spring rings, O-ring made of NBR (Buna-N®) **CAG90-...-...-U-W130-K**

Please always indicate ØB and Series.

SAE Single-Part Flange with Female BSPP Thread BFX-G 40

SAE Single-Part Counterflange with Female BSPP Thread BAS-G 42

SAE Single-Part Flange with Female NPT Thread BFX-N 44

SAE Single-Part Counterflange with Female NPT Thread BAS-N 46

SAE Single-Part Flange with Female UN/UNF Thread BFX-U 48

SAE Single-Part Butt-Weld Flange for High Pressure Tubes BFX-ST 50

SAE Single-Part Butt-Weld Counterflange for High Pressure Tubes BAS-ST 52

SAE Single-Part Butt-Weld Flange for Low Pressure Tubes BFX-STRE 54

SAE Single-Part Butt-Weld Counterflange for Low Pressure Tubes BAS-STRE 55

SAE Single-Part Butt-Weld Flange for Metric Tubes BFX-SRE 56

SAE Single-Part Butt-Weld Counterflange for Metric Tubes BAS-SRE 58

SAE Single-Part Socket-Weld Flange BFX-ES 60

SAE Single-Part Socket-Weld Counterflange BAS-ES 62

SAE Single-Part Socket-Weld Flange (Flat Style) BFX-FL-ES 64

SAE Single-Part Socket-Weld Counterflange (Flat Style) BAS-FL-ES 65

SAE Single-Part Flange with Male Metric Thread and 24° Conical Bore (Shape W acc. to DIN 3861) BFX-L/S 66

SAE Single-Part Flange with Male BSPP Thread and 60° Conical Bore (acc. to BS 5200) BFX-B 68

SAE Single-Part Flange with Male UN/UNF Thread and 37° JIC Taper (acc. to ISO 8434-2 / SAE J514) BFX-J 70

SAE 90° Single-Part Flange with Female BSPP Thread BFX90-G 71

SAE 90° Single-Part Flange with Female NPT Thread BFX90-N 72

SAE 90° Single-Part Butt-Weld Flange for High Pressure Tubes BFX90-STC 73

SAE 90° Single-Part Butt-Weld Flange for Metric Tubes BFX90-SRE 74

SAE 90° Single-Part Socket-Weld Flange BFX90-ES 76

SAE 90° Single-Part Flange with Male Metric Thread and 24° Conical Bore (Shape W acc. to DIN 3861) BFX90-L/S 78

C

SAE Single-Part Flange with Female BSPP Thread
Type BFX-G ▪ 3000 PSI Series

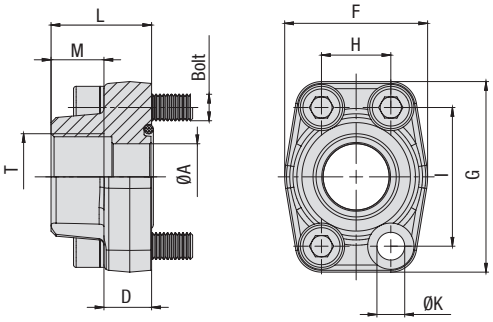

C

3000 PSI Standard Pressure Series (based on ISO 6162-1:2012)

Nominal Size DN	(in)	PN[1] (bar/PSI) 10.9	Dimensions (mm/in) ØA	D	F	G	H	I	L	M	T (BSPP)	ØK[3]	Weight (kg/lbs) ca. per 100	for Bolts Metric[3]	UNC	Ordering Codes
13	1/2	350	13	16	47	57	17,5	38,1	36	15	1/2	8,7	27,6	M8x30	5/16–18 UNC x 1-1/4	**BFX-301-G-W1**
		5075	.51	.63	1.85	2.24	.69	1.50	1.42	.59		.34	60.72			
13	1/2	350	13	16	47	57	17,5	38,1	36	20	3/8 (06)	8,7	29,3	M8x30	5/16–18 UNC x 1-1/4	**BFX-301-G06-W1**
		5075	.51	.63	1.85	2.24	.69	1.50	1.42	.79		.34	64.46			
19	3/4	350	19	18	50	67	22,3	47,6	36	18	3/4	10,5	38,6	M10x35	3/8–16 UNC x 1-1/2	**BFX-302-G-W1**
		5075	.75	.71	1.97	2.64	.88	1.87	1.42	.71		.41	84.92			
19	3/4	350	13	18	50	67	22,3	47,6	36	15	1/2 (08)	10,5	40,3	M10x35	3/8–16 UNC x 1-1/2	**BFX-302-G08-W1**
		5075	.51	.71	1.97	2.64	.88	1.87	1.42	.59		.41	88.66			
25	1	320	25	18	54	72	26,2	52,4	38	20	1	10,5	45,4	M10x35	3/8–16 UNC x 1-1/2	**BFX-303-G-W1**
		4641	.98	.71	2.13	2.83	1.03	2.06	1.50	.79		.41	99.88			
25	1	320	19	18	54	72	26,2	52,4	38	18	3/4 (12)	10,5	54,0	M10x35	3/8–16 UNC x 1-1/2	**BFX-303-G12-W1**
		4641	.75	.71	2.13	2.83	1.03	2.06	1.50	.71		.41	118.80			
32	1-1/4	280	31	21	68	82	30,2	58,7	41	22	1-1/4	11,5 (13,5)	67,9	M10x40 (M12x40)	7/16–14 UNC x 1-1/2	**BFX-304-G-W1**
		4061	1.22	.83	2.68	3.23	1.19	2.31	1.61	.87		.45 (.53)	149.38			
32	1-1/4	280	25	21	68	82	30,2	58,7	41	20	1 (16)	11,5 (13,5)	85,5	M10x40 (M12x40)	7/16–14 UNC x 1-1/2	**BFX-304-G16-W1**
		4061	.98	.83	2.68	3.23	1.19	2.31	1.61	.79		.45 (.53)	188.10			
38	1-1/2	210	38	25	79	96	35,7	69,9	44	24	1-1/2	13,5 (14,5)	113,9	M12x45 (M14x45)	1/2–13 UNC x 1-3/4	**BFX-305-G-W1**
		3045	1.50	.98	3.11	3.78	1.41	2.75	1.73	.94		.53 (.57)	250.58			
38	1-1/2	210	31	25	79	96	35,7	69,9	44	22	1-1/4 (20)	13,5 (14,5)	119,7	M12x45 (M14x45)	1/2–13 UNC x 1-3/4	**BFX-305-G20-W1**
		3045	1.22	.98	3.11	3.78	1.41	2.75	1.73	.87		.53 (.57)	263.34			
51	2	210	50	25,5	88	102	42,9	77,8	45	26	2	13,5 (14,5)	120,4	M12x45 (M14x45)	1/2–13 UNC x 1-3/4	**BFX-306-G-W1**
		3045	1.97	1.00	3.46	4.02	1.69	3.06	1.77	1.02		.53 (.57)	264.88			
51	2	210	38	25,5	88	102	42,9	77,8	45	24	1-1/2 (24)	13,5 (14,5)	154,6	M12x45 (M14x45)	1/2–13 UNC x 1-3/4	**BFX-306-G24-W1**
		3045	1.50	1.00	3.46	4.02	1.69	3.06	1.77	.94		.53 (.57)	340.12			
64	2-1/2	175	63	26	101	115	50,8	88,9	50	30	2-1/2	13,5 (14,5)	154,5	M12x45 (M14x45)	1/2–13 UNC x 1-3/4	**BFX-307-G-W1**
		2538	2.48	1.02	3.98	4.53	2.00	3.50	1.97	1.18		.53 (.57)	339.90			
64	2-1/2	175	50	26	101	115	50,8	88,9	50	26	2 (32)	13,5 (14,5)	201,8	M12x45 (M14x45)	1/2–13 UNC x 1-3/4	**BFX-307-G32-W1**
		2538	1.97	1.02	3.98	4.53	2.00	3.50	1.97	1.02		.53 (.57)	443.96			
76	3	160	73	27,5	127	137	61,9	106,4	50	30	3	17	215,0	M16x50	5/8–11 UNC x 2	**BFX-308-G-W1**
		2320	2.87	1.08	5.00	5.39	2.44	4.19	1.97	1.18		.67	473.00			
76	3	160	63	27,5	127	137	61,9	106,4	50	30	2-1/2 (40)	17	257,2	M16x50	5/8–11 UNC x 2	**BFX-308-G40-W1**
		2320	2.48	1.08	5.00	5.39	2.44	4.19	1.97	1.18		.67	565.84			
89	3-1/2	35	89	27,5	138	155	69,8	120,7	50	30	3-1/2	17	247,2	M16x50	5/8–11 UNC x 2	**BFX-309-G-W1**
		508	3.50	1.08	5.43	6.10	2.75	4.75	1.97	1.18		.67	543.84			
102	4	35	99	27,5	147	163	77,8	130,2	50	30	4	17	292,5	M16x50	5/8–11 UNC x 2	**BFX-310-G-W1**
		508	3.90	1.08	5.79	6.42	3.06	5.13	1.97	1.18		.67	643.50			
127	5	35	120	28	180	184	92	152,4	50	30	5	17	365,0	M16x55	5/8–11 UNC x 2-1/4	**BFX-311-G-W1**
		508	4.72	1.10	7.09	7.24	3.62	6.00	1.97	1.18		.67	803.00			

Please see Page 89 for separate Bolt Sets and Sealings.

Materials / Ordering Options / Examples

* SAE Single-Part Flange (without O-ring) made of Steel S355J2 or equivalent, blank (oiled) — **BFX-...-G-W1**
* SAE Single-Part Flange (without O-ring) made of Stainless Steel V4A – 1.4404 (on request) — **BFX-...-G-W5**

* Size of connection thread deviating from the standard (e.g. 1-1/4 BSPP) — **BFX-...-G20-W1**

* Kit including Metric bolts 10.9, spring rings, O-ring made of NBR (Buna-N®) — **BFX-...-G-W1-K**
* Kit including Metric bolts 10.9, spring rings, O-ring made of FKM (Viton®) — **BFX-...-G-V-W1-K**
* Kit including UNC bolts (Grade 8), spring rings, O-ring made of NBR (Buna-N®) — **BFX-...-G-U-W1-K**

[1] The maximum working pressure PN (bar/PSI) applies only to the flange itself and depends on the bolts used (Grade 10.9). The actual maximum working pressure depends on the thickness and the quality of the tube used.

[3] Alternative options shown in brackets are available on request.

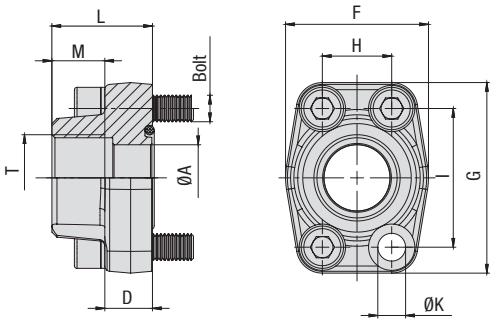

SAE Single-Part Flange with Female BSPP Thread
Type BFX-G ▪ 6000 PSI Series

C

6000 PSI High Pressure Series (based on ISO 6162-2:2012)

Nominal Size DN	(in)	PN[1] (bar/PSI) 10.9	Dimensions (mm/in) ØA	D	F	G	H	I	L	M	T (BSPP)	ØK	Weight (kg/lbs) ca. per 100	for Bolts Metric	UNC	Ordering Codes
13	1/2	420	13	16,5	47	57	18,2	40,5	36	15	1/2	8,7	27,2	M8x30	5/16–18 UNC x 1-1/4	**BFX-601-G-W1**
		6090	.51	.65	1.85	2.24	.72	1.59	1.42	.59		.34	59.84			
13	1/2	420	13	16,5	47	57	18,2	40,5	36	20	3/8 (06)	8,7	29,3	M8x30	5/16–18 UNC x 1-1/4	**BFX-601-G06-W1**
		6090	.51	.65	1.85	2.24	.72	1.59	1.42	.79		.34	64.46			
19	3/4	420	19	19,5	54	72	23,8	50,8	36	18	3/4	10,5	54,3	M10x35	3/8–16 UNC x 1-1/2	**BFX-602-G-W1**
		6090	.75	.77	2.13	2.83	.94	2.00	1.42	.71		.41	119.46			
19	3/4	420	14	19,5	54	72	23,8	50,8	36	15	1/2 (08)	10,5	55,7	M10x35	3/8–16 UNC x 1-1/2	**BFX-602-G08-W1**
		6090	.55	.77	2.13	2.83	.94	2.00	1.42	.59		.41	122.54			
25	1	420	25	24,5	68	82	27,8	57,2	44	20	1	13	83,7	M12x45	7/16–14 UNC x 1-3/4	**BFX-603-G-W1** [2]
		6090	.98	.96	2.68	3.23	1.09	2.25	1.73	.79		.51	184.14			
25	1	420	19	24,5	68	82	27,8	57,2	44	18	3/4 (12)	13	80,0	M12x45	7/16–14 UNC x 1-3/4	**BFX-603-G12-W1** [2]
		6090	.75	.96	2.68	3.23	1.09	2.25	1.73	.71		.51	176.00			
32	1-1/4	420	31	27,5	79	95	31,6	66,6	44	22	1-1/4	13,5	119,3	M12x45	1/2–13 UNC x 1-3/4	**BFX-604-G-W1**
		6090	1.22	1.08	3.11	3.74	1.24	2.62	1.73	.87		.53	262.46			
32	1-1/4	420	31	27,5	79	95	31,6	66,6	44	22	1-1/4	15	112,6	M14x45		**BFX-604-G-M14-W1**
		6090	1.22	1.08	3.11	3.74	1.24	2.62	1.73	.87		.59	247.72			
32	1-1/4	420	25	27,5	79	95	31,6	66,6	44	20	1	13,5	122,0	M12x45	1/2–13 UNC x 1-3/4	**BFX-604-G16-W1**
		6090	.98	1.08	3.11	3.74	1.24	2.62	1.73	.79		.53	268.40			
32	1-1/4	420	25	27,5	79	95	31,6	66,6	44	20	1	15	118,4	M14x45		**BFX-604-G16-M14-W1**
		6090	.98	1.08	3.11	3.74	1.24	2.62	1.73	.79		.59	260.48			
38	1-1/2	420	38	31	88	108	36,5	79,3	51	24	1-1/2	17	183,3	M16x55	5/8–11 UNC x 2-1/4	**BFX-605-G-W1**
		6090	1.50	1.22	3.46	4.25	1.44	3.12	2.01	.94		.67	403.26			
38	1-1/2	420	31	31	88	108	36,5	79,3	51	22	1-1/4 (20)	17	196,0	M16x55	5/8–11 UNC x 2-1/4	**BFX-605-G20-W1**
		6090	1.22	1.22	3.46	4.25	1.44	3.12	2.01	.87		.67	431.20			
51	2	420	50	37	118	137	44,5	96,8	65	33	2	21	327,9	M20x70	3/4–10 UNC x 2-3/4	**BFX-606-G-W1**
		6090	1.97	1.46	4.65	5.39	1.75	3.81	2.56	1.30		.83	721.38			
64	2-1/2	420	63	45	152	180	58,7	123,8	80	35	2-1/2	26	678,1	M24x80		**BFX-607-G-W1**
		6090	2.48	1.77	5.98	7.09	2.31	4.87	3.15	1.38		1.02	1491.82			

Please see Page 89 for separate Bolt Sets and Sealings.

[1] The maximum working pressure PN (bar/PSI) applies only to the flange itself and depends on the bolts used (Grade 10.9). The actual maximum working pressure depends on the thickness and the quality of the tube used.

[2] For UNC threaded bolts, use hexagon head bolts only. Please note that these do not belong to our product range.

Materials / Ordering Options / Examples

* SAE Single-Part Flange (without O-ring) made of Steel S355J2 or equivalent, blank (oiled) **BFX-...-G-W1**
* SAE Single-Part Flange (without O-ring) made of Stainless Steel V4A – 1.4404 (on request) **BFX-...-G-W5**

* Size of connection thread deviating from the standard (e.g. 1-1/4 BSPP) **BFX-...-G20-W1**

* Kit including Metric bolts 10.9, spring rings, O-ring made of NBR (Buna-N®) **BFX-...-G-W1-K**
* Kit including Metric bolts 10.9, spring rings, O-ring made of FKM (Viton®) **BFX-...-G-V-W1-K**
* Kit including UNC bolts (Grade 8), spring rings, O-ring made of NBR (Buna-N®) **BFX-...-G-U-W1-K**

SAE Single-Part Counterflange with Female BSPP Thread Type BAS-G ▪ 3000 PSI Series

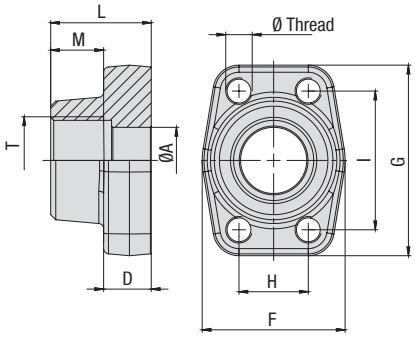

C

3000 PSI Standard Pressure Series (based on ISO 6162-1:2012)

Nominal Size DN	(in)	PN[1] (bar/PSI) 10.9	Dimensions (mm/in) ØA	D	F	G	H	I	L	M	T (BSPP)	Weight (kg/lbs) ca. per 100	Ø Thread Metric[3]	UNC	Ordering Codes
13	1/2	350	13	16	47	57	17,5	38,1	36	15	1/2	29,0	M8	5/16–18 UNC	**BAS-301-G-W1**
		5075	.51	.63	1.85	2.24	.69	1.50	1.42	.59		63.80			
13	1/2	350	13	16	47	57	17,5	38,1	36	20	3/8 (06)	30,8	M8	5/16–18 UNC	**BAS-301-G06-W1**
		5075	.51	.63	1.85	2.24	.69	1.50	1.42	.79		67.76			
19	3/4	350	19	18	50	67	22,3	47,6	36	18	3/4	41,4	M10	3/8–16 UNC	**BAS-302-G-W1**
		5075	.75	.71	1.97	2.64	.88	1.87	1.42	.71		91.08			
19	3/4	350	13	18	50	67	22,3	47,6	36	15	1/2 (08)	43,4	M10	3/8–16 UNC	**BAS-302-G08-W1**
		5075	.51	.71	1.97	2.64	.88	1.87	1.42	.59		95.48			
25	1	320	25	18	54	72	26,2	52,4	38	20	1	47,0	M10	3/8–16 UNC	**BAS-303-G-W1**
		4641	.98	.71	2.13	2.83	1.03	2.06	1.50	.79		103.40			
25	1	320	19	18	54	72	26,2	52,4	38	18	3/4 (12)	56,7	M10	3/8–16 UNC	**BAS-303-G12-W1**
		4641	.75	.71	2.13	2.83	1.03	2.06	1.50	.71		124.74			
32	1-1/4	280	31	21	68	82	30,2	58,7	41	22	1-1/4	69,5	M10 (M12)	7/16–14 UNC	**BAS-304-G-W1**
		4061	1.22	.83	2.68	3.23	1.19	2.31	1.61	.87		152.90			
32	1-1/4	280	25	21	68	82	30,2	58,7	41	20	1 (16)	84,4	M10 (M12)	7/16–14 UNC	**BAS-304-G16-W1**
		4061	.98	.83	2.68	3.23	1.19	2.31	1.61	.79		185.68			
38	1-1/2	210	38	25	79	96	35,7	69,9	44	24	1-1/2	114,3	M12 (M14)	1/2–13 UNC	**BAS-305-G-W1**
		3045	1.50	.98	3.11	3.78	1.41	2.75	1.73	.94		251.46			
38	1-1/2	210	31	25	79	96	35,7	69,9	44	22	1-1/4 (20)	124,6	M12 (M14)	1/2–13 UNC	**BAS-305-G20-W1**
		3045	1.22	.98	3.11	3.78	1.41	2.75	1.73	.87		274.12			
51	2	210	50	25,5	88	102	42,9	77,8	45	26	2	125,7	M12 (M14)	1/2–13 UNC	**BAS-306-G-W1**
		3045	1.97	1.00	3.46	4.02	1.69	3.06	1.77	1.02		276.54			
51	2	210	38	25,5	88	102	42,9	77,8	45	24	1-1/2 (24)	158,0	M12 (M14)	1/2–13 UNC	**BAS-306-G24-W1**
		3045	1.50	1.00	3.46	4.02	1.69	3.06	1.77	.94		347.60			
64	2-1/2	175	63	26	101	115	50,8	88,9	50	30	2-1/2	158,1	M12 (M14)	1/2–13 UNC	**BAS-307-G-W1**
		2538	2.48	1.02	3.98	4.53	2.00	3.50	1.97	1.18		347.82			
64	2-1/2	175	50	26	101	115	50,8	88,9	50	26	2 (32)	209,5	M12 (M14)	1/2–13 UNC	**BAS-307-G32-W1**
		2538	1.97	1.02	3.98	4.53	2.00	3.50	1.97	1.02		460.90			
76	3	160	73	27,5	127	137	61,9	106,4	50	30	3	229,4	M16	5/8–11 UNC	**BAS-308-G-W1**
		2320	2.87	1.08	5.00	5.39	2.44	4.19	1.97	1.18		504.68			
76	3	160	63	27,5	127	137	61,9	106,4	50	30	2-1/2 (40)	273,4	M16	5/8–11 UNC	**BAS-308-G40-W1**
		2320	2.48	1.08	5.00	5.39	2.44	4.19	1.97	1.18		601.48			
89	3-1/2	35	89	27,5	138	155	69,8	120,7	50	30	3-1/2	253,0	M16	5/8–11 UNC	**BAS-309-G-W1**
		508	3.50	1.08	5.43	6.10	2.75	4.75	1.97	1.18		556.60			
102	4	35	99	27,5	147	163	77,8	130,2	50	30	4	302,5	M16	5/8–11 UNC	**BAS-310-G-W1**
		508	3.90	1.08	5.79	6.42	3.06	5.13	1.97	1.18		665.50			
127	5	35	120	28	180	184	92	152,4	50	30	5	379,2	M16	5/8–11 UNC	**BAS-311-G-W1**
		508	4.72	1.10	7.09	7.24	3.62	6.00	1.97	1.18		834.24			

Materials / Ordering Options / Examples

* SAE Single-Part Counterflange made of Steel S355J2 or equivalent, blank (oiled) with Metric tapped holes **BAS-...-G-W1**
* SAE Single-Part Counterflange made of Stainless Steel V4A – 1.4404 (on request) with Metric tapped holes **BAS-...-G-W5**
* SAE Single-Part Counterflange made of Steel S355J2 or equivalent, blank (oiled) with size of Metric tapped holes deviating from the standard (e.g. M14) **BAS-...-G-M14-W1**
* SAE Single-Part Counterflange made of Steel S355J2 or equivalent, blank (oiled) with UNC tapped holes **BAS-...-G-U-W1**
* Size of connection thread deviating from the standard (e.g. 1-1/4 BSPP) **BAS-...-G20-W1**

[1] The maximum working pressure PN (bar/PSI) applies only to the flange itself and depends on the bolts used (Grade 10.9). The actual maximum working pressure depends on the thickness and the quality of the tube used.

[3] Alternative options shown in brackets are available on request.

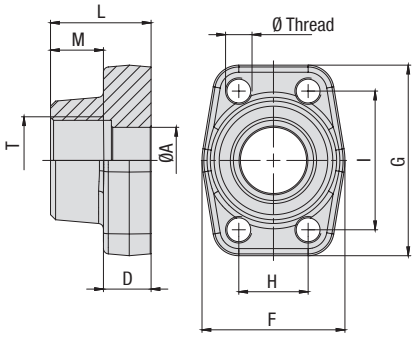

SAE Single-Part Counterflange with Female BSPP Thread
Type BAS-G ▪ 6000 PSI Series

C

6000 PSI High Pressure Series (based on ISO 6162-2:2012)

Nominal Size DN	(in)	PN[1] (bar/PSI) 10.9	Dimensions (mm/in) ØA	D	F	G	H	I	L	M	T (BSPP)	Weight (kg/lbs) ca. per 100	Ø Thread Metric	UNC	Ordering Codes
13	1/2	420	13	16,5	47	57	18,2	40,5	36	15	1/2	28,9	M8	5/16–18 UNC	BAS-601-G-W1
		6090	.51	.65	1.85	2.24	.72	1.59	1.42	.59		63.58			
13	1/2	420	13	16,5	47	57	18,2	40,5	36	20	3/8 (06)	31,3	M8	5/16–18 UNC	BAS-601-G06-W1
		6090	.51	.65	1.85	2.24	.72	1.59	1.42	.79		68.86			
19	3/4	420	19	19,5	54	72	23,8	50,8	36	18	3/4	52,6	M10	3/8–16 UNC	BAS-602-G-W1
		6090	.75	.77	2.13	2.83	.94	2.00	1.42	.71		115.72			
19	3/4	420	14	19,5	54	72	23,8	50,8	36	15	1/2 (08	58,6	M10	3/8–16 UNC	BAS-602-G08-W1
		6090	.55	.77	2.13	2.83	.94	2.00	1.42	.59		128.92			
25	1	420	25	24,5	68	82	27,8	57,2	44	20	1	77,9	M12	7/16–14 UNC	BAS-603-G-W1
		6090	.98	.96	2.68	3.23	1.09	2.25	1.73	.79		171.38			
25	1	420	19	24,5	68	82	27,8	57,2	44	18	3/4 (12)	88,3	M12	7/16–14 UNC	BAS-603-G12-W1
		6090	.75	.96	2.68	3.23	1.09	2.25	1.73	.71		194.26			
32	1-1/4	420	31	27,5	79	95	31,6	66,6	44	22	1-1/4	123,8	M12	1/2–13 UNC	BAS-604-G-W1
		6090	1.22	1.08	3.11	3.74	1.24	2.62	1.73	.87		272.36			
32	1-1/4	420	31	27,5	79	95	31,6	66,6	44	22	1-1/4	119,9	M14		BAS-604-G-M14-W1
		6090	1.22	1.08	3.11	3.74	1.24	2.62	1.73	.87		263.78			
32	1-1/4	420	25	27,5	79	95	31,6	66,6	44	20	1 (16)	123,8	M12	1/2–13 UNC	BAS-604-G16-W1
		6090	.98	1.08	3.11	3.74	1.24	2.62	1.73	.79		272.36			
32	1-1/4	420	25	27,5	79	95	31,6	66,6	44	20	1 (16)	122,4	M14		BAS-604-G16-M14-W1
		6090	.98	1.08	3.11	3.74	1.24	2.62	1.73	.79		269.28			
38	1-1/2	420	38	31	88	108	36,5	79,3	51	24	1-1/2	186,9	M16	5/8–11 UNC	BAS-605-G-W1
		6090	1.50	1.22	3.46	4.25	1.44	3.12	2.01	.94		411.18			
38	1-1/2	420	31	31	88	108	36,5	79,3	51	22	1-1/4 (20)	203,4	M16	5/8–11 UNC	BAS-605-G20-W1
		6090	1.22	1.22	3.46	4.25	1.44	3.12	2.01	.87		447.48			
51	2	420	50	37	118	137	44,5	96,8	58	33	2	341,5	M20	3/4–10 UNC	BAS-606-G-W1
		6090	1.97	1.46	4.65	5.39	1.75	3.81	2.28	1.30		751.30			
64	2-1/2	420	63	45	152	180	58,7	123,8	80	35	2-1/2	696,0	M24		BAS-607-G-W1
		6090	2.48	1.77	5.98	7.09	2.31	4.87	3.15	1.38		1531.20			

[1] The maximum working pressure PN (bar/PSI) applies only to the flange itself and depends on the bolts used (Grade 10.9). The actual maximum working pressure depends on the thickness and the quality of the tube used.

Materials / Ordering Options / Examples

* SAE Single-Part Counterflange made of Steel S355J2 or equivalent, blank (oiled) with Metric tapped holes **BAS-...-G-W1**
* SAE Single-Part Counterflange made of Stainless Steel V4A – 1.4404 (on request) with Metric tapped holes **BAS-...-G-W5**
* SAE Single-Part Counterflange made of Steel S355J2 or equivalent, blank (oiled) with size of Metric tapped holes deviating from the standard (e.g. M14) **BAS-...-G-M14-W1**
* SAE Single-Part Counterflange made of Steel S355J2 or equivalent, blank (oiled) with UNC tapped holes **BAS-...-G-U-W1**
* Size of connection thread deviating from the standard (e.g. 1-1/4 BSPP) **BAS-...-G20-W1**

SAE Single-Part Flange with Female NPT Thread
Type BFX-N ▪ 3000 PSI Series

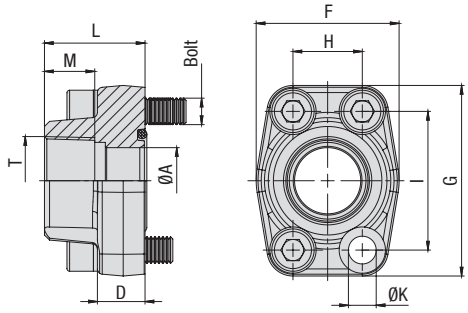

C

3000 PSI Standard Pressure Series (based on ISO 6162-1:2012)

Nominal Size DN	(in)	PN[1] (bar/PSI) 10.9	Dimensions (mm/in) ØA	D	F	G	H	I	L	M	T (NPT)	ØK[3]	Weight (kg/lbs) ca. per 100	for Bolts Metric[3]	UNC	Ordering Codes
13	1/2	350	13	16	47	57	17,5	38,1	36	15	1/2	8,7	27,6	M8x30	5/16–18 UNC x 1-1/4	**BFX-301-N-W1**
		5075	.51	.63	1.85	2.24	.69	1.50	1.42	.59		.34	60.72			
13	1/2	350	13	16	47	57	17,5	38,1	36	20	3/8 (06)	8,7	30,7	M8x30	5/16–18 UNC x 1-1/4	**BFX-301-N06-W1**
		5075	.51	.63	1.85	2.24	.69	1.50	1.42	.79		.34	67.54			
19	3/4	350	19	18	50	67	22,3	47,6	36	18	3/4	10,5	38,8	M10x35	3/8–16 UNC x 1-1/2	**BFX-302-N-W1**
		5075	.75	.71	1.97	2.64	.88	1.87	1.42	.71		.41	85.36			
19	3/4	350	13	18	50	67	22,3	47,6	36	15	1/2 (08)	10,5	40,0	M10x35	3/8–16 UNC x 1-1/2	**BFX-302-N08-W1**
		5075	.51	.71	1.97	2.64	.88	1.87	1.42	.59		.41	88.00			
25	1	320	25	18	54	72	26,2	52,4	38	20	1	10,5	46,0	M10x35	3/8–16 UNC x 1-1/2	**BFX-303-N-W1**
		4641	.98	.71	2.13	2.83	1.03	2.06	1.50	.79		.41	101.20			
25	1	320	19	18	54	72	26,2	52,4	38	18	3/4 (12)	10,5	53,3	M10x35	3/8–16 UNC x 1-1/2	**BFX-303-N12-W1**
		4641	.75	.71	2.13	2.83	1.03	2.06	1.50	.71		.41	117.26			
32	1-1/4	280	31	21	68	82	30,2	58,7	41	22	1-1/4	11,5 (13,5)	69,5	M10x40 (M12x40)	7/16–14 UNC x 1-1/2	**BFX-304-N-W1**
		4061	1.22	.83	2.68	3.23	1.19	2.31	1.61	.87		.4 (.53)	152.90			
32	1-1/4	280	25	21	68	82	30,2	58,7	41	20	1 (16)	11,5 (13,5)	84,0	M10x40 (M12x40)	7/16–14 UNC x 1-1/2	**BFX-304-N16-W1**
		4061	.98	.83	2.68	3.23	1.19	2.31	1.61	.79		.45 (.53)	184.80			
38	1-1/2	210	38	25	79	96	35,7	69,9	44	24	1-1/2	13,5 (14,5)	106,6	M12x45 (M14x45)	1/2–13 UNC x 1-3/4	**BFX-305-N-W1**
		3045	1.50	.98	3.11	3.78	1.41	2.75	1.73	.94		.53 (.57)	234.52			
38	1-1/2	210	31	25	79	96	35,7	69,9	44	22	1-1/4 (20)	13,5 (14,5)	125,8	M12x45 (M14x45)	1/2–13 UNC x 1-3/4	**BFX-305-N20-W1**
		3045	1.22	.98	3.11	3.78	1.41	2.75	1.73	.87		.53 (.57)	276.76			
51	2	210	50	25,5	88	102	42,9	77,8	45	26	2	13,5 (14,5)	122,9	M12x45 (M14x45)	1/2–13 UNC x 1-3/4	**BFX-306-N-W1**
		3045	1.97	1.00	3.46	4.02	1.69	3.06	1.77	1.02		.53 (.57)	270.38			
51	2	210	38	25,5	88	102	42,9	77,8	45	24	1-1/2 (24)	13,5 (14,5)	150,0	M12x45 (M14x45)	1/2–13 UNC x 1-3/4	**BFX-306-N24-W1**
		3045	1.50	1.00	3.46	4.02	1.69	3.06	1.77	.94		.53 (.57)	330.00			
64	2-1/2	175	63	26	101	115	50,8	88,9	50	30	2-1/2	13,5 (14,5)	153,9	M12x45 (M14x45)	1/2–13 UNC x 1-3/4	**BFX-307-N-W1**
		2538	2.48	1.02	3.98	4.53	2.00	3.50	1.97	1.18		.53 (.57)	338.58			
64	2-1/2	175	50	26	101	115	50,8	88,9	50	26	2 (32)	13,5 (14,5)	202,9	M12x45 (M14x45)	1/2–13 UNC x 1-3/4	**BFX-307-N32-W1**
		2538	1.97	1.02	3.98	4.53	2.00	3.50	1.97	1.02		.53 (.57)	446.38			
76	3	160	73	27,5	127	137	61,9	106,4	50	30	3	17	225,7	M16x50	5/8–11 UNC x 2	**BFX-308-N-W1**
		2320	2.87	1.08	5.00	5.39	2.44	4.19	1.97	1.18		.67	496.54			
76	3	160	63	27,5	127	137	61,9	106,4	50	30	2-1/2 (40)	17	269,7	M16x50	5/8–11 UNC x 2	**BFX-308-N40-W1**
		2320	2.48	1.08	5.00	5.39	2.44	4.19	1.97	1.18		.67	593.34			
89	3-1/2	35	89	27,5	138	155	69,8	120,7	50	30	3-1/2	17	255,0	M16x50	5/8–11 UNC x 2	**BFX-309-N-W1**
		508	3.50	1.08	5.43	6.10	2.75	4.75	1.97	1.18		.67	561.00			
102	4	35	99	27,5	147	163	77,8	130,2	50	30	4	17	286,8	M16x50	5/8–11 UNC x 2	**BFX-310-N-W1**
		508	3.90	1.08	5.79	6.42	3.06	5.13	1.97	1.18		.67	630.96			
127	5	35	120	28	180	184	92	152,4	50	30	5	17	365,2	M16x55	5/8–11 UNC x 2-1/4	**BFX-311-N-W1**
		508	4.72	1.10	7.09	7.24	3.62	6.00	1.97	1.18		.67	803.44			

Please see Page 89 for separate Bolt Sets and Sealings.

Materials / Ordering Options / Examples

* SAE Single-Part Flange (without O-ring) made of Steel S355J2 or equivalent, blank (oiled) — **BFX-...-N-W1**
* SAE Single-Part Flange (without O-ring) made of Stainless Steel V4A – 1.4404 (on request) — **BFX-...-N-W5**

* Size of connection thread deviating from the standard (e.g. 1-1/4 NPT) — **BFX-...-N20-W1**

* Kit including Metric bolts 10.9, spring rings, O-ring made of NBR (Buna-N®) — **BFX-...-N-W1-K**
* Kit including Metric bolts 10.9, spring rings, O-ring made of FKM (Viton®) — **BFX-...-N-V-W1-K**
* Kit including UNC bolts (Grade 8), spring rings, O-ring made of NBR (Buna-N®) — **BFX-...-N-U-W1-K**

[1] The maximum working pressure PN (bar/PSI) applies only to the flange itself and depends on the bolts used (Grade 10.9). The actual maximum working pressure depends on the thickness and the quality of the tube used.

[3] Alternative options shown in brackets are available on request.

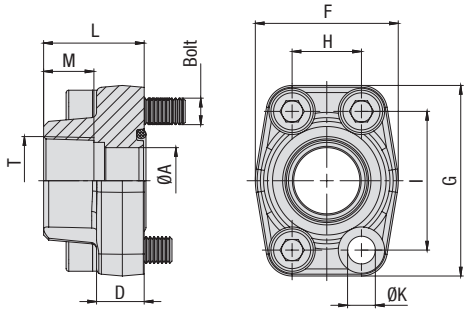

SAE Single-Part Flange with Female NPT Thread
Type BFX-N ▪ 6000 PSI Series

C

6000 PSI High Pressure Series (based on ISO 6162-2:2012)

Nominal Size DN	(in)	PN[1] (bar/PSI) 10.9	Dimensions (mm/in) ØA	D	F	G	H	I	L	M	T (NPT)	ØK	Weight (kg/lbs) ca. per 100	for Bolts Metric	UNC	Ordering Codes
13	1/2	420	13	16,5	47	57	18,2	40,5	36	15	1/2	8,7	27,6	M8x30	5/16–18 UNC x 1-1/4	**BFX-601-N-W1**
		6090	.51	.65	1.85	2.24	.72	1.59	1.42	.59		.34	60.72			
13	1/2	420	13	16,5	47	57	18,2	40,5	36	20	3/8 (06)	8,7	31,5	M8x30	5/16–18 UNC x 1-1/4	**BFX-601-N06-W1**
		6090	.51	.65	1.85	2.24	.72	1.59	1.42	.79		.34	69.30			
19	3/4	420	19	19,5	54	72	23,8	50,8	36	18	3/4	10,5	54,9	M10x35	3/8–16 UNC x 1-1/2	**BFX-602-N-W1**
		6090	.75	.77	2.13	2.83	.94	2.00	1.42	.71		.41	120.78			
19	3/4	420	14	19,5	54	72	23,8	50,8	36	15	1/2 (08)	10,5	56,3	M10x35	3/8–16 UNC x 1-1/2	**BFX-602-N08-W1**
		6090	.55	.77	2.13	2.83	.94	2.00	1.42	.59		.41	123.86			
25	1	420	25	24,5	68	82	27,8	57,2	44	20	1	13	79,0	M12x45	7/16–14 UNC x 1-3/4	**BFX-603-N-W1** [2]
		6090	.98	.96	2.68	3.23	1.09	2.25	1.73	.79		.51	173.80			
25	1	420	19	24,5	68	82	27,8	57,2	44	18	3/4 (12)	13	92,9	M12x45	7/16–14 UNC x 1-3/4	**BFX-603-N12-W1** [2]
		6090	.75	.96	2.68	3.23	1.09	2.25	1.73	.71		.51	204.38			
32	1-1/4	420	31	27,5	79	95	31,6	66,6	44	22	1-1/4	13,5	119,0	M12x45	1/2–13 UNC x 1-3/4	**BFX-604-N-W1**
		6090	1.22	1.08	3.11	3.74	1.24	2.62	1.73	.87		.53	261.80			
32	1-1/4	420	31	27,5	79	95	31,6	66,6	44	22	1-1/4	15	114,6	M14x45		**BFX-604-N-M14-W1**
		6090	1.22	1.08	3.11	3.74	1.24	2.62	1.73	.87		.59	252.12			
32	1-1/4	420	25	27,5	79	95	31,6	66,6	44	20	1	13,5	120,3	M12x45	1/2–13 UNC x 1-3/4	**BFX-604-N16-W1**
		6090	.98	1.08	3.11	3.74	1.24	2.62	1.73	.79		.53	264.66			
32	1-1/4	420	25	27,5	79	95	31,6	66,6	44	20	1 (16)	15	127,7	M14x45		**BFX-604-N16-M14-W1**
		6090	.98	1.08	3.11	3.74	1.24	2.62	1.73	.79		.59	280.94			
38	1-1/2	420	38	31	88	108	36,5	79,3	51	24	1-1/2	17	190,6	M16x55	5/8–11 UNC x 2-1/4	**BFX-605-N-W1**
		6090	1.50	1.22	3.46	4.25	1.44	3.12	2.01	.94		.67	419.32			
38	1-1/2	420	31	31	88	108	36,5	79,3	51	22	1-1/4 (20)	17	185,4	M16x55	5/8–11 UNC x 2-1/4	**BFX-605-N20-W1**
		6090	1.22	1.22	3.46	4.25	1.44	3.12	2.01	.87		.67	407.88			
51	2	420	50	37	118	137	44,5	96,8	65	33	2	21	330,5	M20x70	3/4–10 UNC x 2-3/4	**BFX-606-N-W1**
		6090	1.97	1.46	4.65	5.39	1.75	3.81	2.56	1.30		.83	727.10			

Please see Page 89 for separate Bolt Sets and Sealings.

[1] The maximum working pressure PN (bar/PSI) applies only to the flange itself and depends on the bolts used (Grade 10.9). The actual maximum working pressure depends on the thickness and the quality of the tube used.

[2] For UNC threaded bolts, use hexagon head bolts only. Please note that these do not belong to our product range.

Materials / Ordering Options / Examples

* SAE Single-Part Flange (without O-ring) made of Steel S355J2 or equivalent, blank (oiled) — **BFX-...-N-W1**
* SAE Single-Part Flange (without O-ring) made of Stainless Steel V4A – 1.4404 (on request) — **BFX-...-N-W5**

* Size of connection thread deviating from the standard (e.g. 1-1/4 NPT) — **BFX-...-N20-W1**

* Kit including Metric bolts 10.9, spring rings, O-ring made of NBR (Buna-N®) — **BFX-...-N-W1-K**
* Kit including Metric bolts 10.9, spring rings, O-ring made of FKM (Viton®) — **BFX-...-N-V-W1-K**
* Kit including UNC bolts (Grade 8), spring rings, O-ring made of NBR (Buna-N®) — **BFX-...-N-U-W1-K**

SAE Single-Part Counterflange with Female NPT Thread
Type BAS-N ▪ 3000 PSI Series

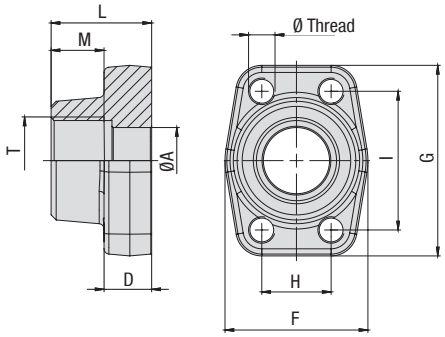

C

3000 PSI Standard Pressure Series (based on ISO 6162-1:2012)

Nominal Size		PN[1] (bar/PSI)	Dimensions (mm/in)									Weight (kg/lbs) ca.	Ø Thread		Ordering Codes
DN	(in)	10.9	ØA	D	F	G	H	I	L	M	T (NPT)	per 100	Metric[3]	UNC	
13	1/2	350	13	16	47	57	17,5	38,1	36	15	1/2	29,0	M8	5/16–18 UNC	**BAS-301-N-W1**
		5075	.51	.63	1.85	2.24	.69	1.50	1.42	.59		63.80			
13	1/2	350	13	16	47	57	17,5	38,1	36	20	3/8 (06)	30,8	M8	5/16–18 UNC	**BAS-301-N06-W1**
		5075	.51	.63	1.85	2.24	.69	1.50	1.42	.79		67.76			
19	3/4	350	19	18	50	67	22,3	47,6	36	18	3/4	40,8	M10	3/8–16 UNC	**BAS-302-N-W1**
		5075	.75	.71	1.97	2.64	.88	1.87	1.42	.71		89.80			
19	3/4	350	13	18	50	67	22,3	47,6	36	15	1/2 (08)	43,6	M10	3/8–16 UNC	**BAS-302-N08-W1**
		5075	.51	.71	1.97	2.64	.88	1.87	1.42	.59		95.92			
25	1	320	25	18	54	72	26,2	52,4	38	20	1	49,5	M10	3/8–16 UNC	**BAS-303-N-W1**
		4641	.98	.71	2.13	2.83	1.03	2.06	1.50	.79		108.90			
25	1	320	19	18	54	72	26,2	52,4	38	18	3/4 (12)	44,6	M10	3/8–16 UNC	**BAS-303-N12-W1**
		4641	.75	.71	2.13	2.83	1.03	2.06	1.50	.71		98.12			
32	1-1/4	280	31	21	68	82	30,2	58,7	41	22	1-1/4	71,2	M10 (M12)	7/16–14 UNC	**BAS-304-N-W1**
		4061	1.22	.83	2.68	3.23	1.19	2.31	1.61	.87		156.64			
32	1-1/4	280	25	21	68	82	30,2	58,7	41	20	1 (16)	85,9	M10 (M12)	7/16–14 UNC	**BAS-304-N16-W1**
		4061	.98	.83	2.68	3.23	1.19	2.31	1.61	.79		188.98			
38	1-1/2	210	38	25	79	96	35,7	69,9	44	24	1-1/2	110,6	M12 (M14)	1/2–13 UNC	**BAS-305-N-W1**
		3045	1.50	.98	3.11	3.78	1.41	2.75	1.73	.94		243.36			
38	1-1/2	210	31	25	79	96	35,7	69,9	44	22	1-1/4 (20)	125,7	M12 (M14)	1/2–13 UNC	**BAS-305-N20-W1**
		3045	1.22	.98	3.11	3.78	1.41	2.75	1.73	.87		276.54			
51	2	210	50	25,5	88	102	42,9	77,8	45	26	2	127,0	M12 (M14)	1/2–13 UNC	**BAS-306-N-W1**
		3045	1.97	1.00	3.46	4.02	1.69	3.06	1.77	1.02		279.40			
51	2	210	38	25,5	88	102	42,9	77,8	45	24	1-1/2 (24)	156,2	M12 (M14)	1/2–13 UNC	**BAS-306-N24-W1**
		3045	1.50	1.00	3.46	4.02	1.69	3.06	1.77	.94		343.64			
64	2-1/2	175	63	26	101	115	50,8	88,9	50	30	2-1/2	176,1	M12 (M14)	1/2–13 UNC	**BAS-307-N-W1**
		2538	2.48	1.02	3.98	4.53	2.00	3.50	1.97	1.18		387.42			
64	2-1/2	175	50	26	101	115	50,8	88,9	50	26	2 (32)	176,1	M12 (M14)	1/2–13 UNC	**BAS-307-N32-W1**
		2538	1.97	1.02	3.98	4.53	2.00	3.50	1.97	1.02		387.42			
76	3	160	73	27,5	127	137	61,9	106,4	50	30	3	233,3	M16	5/8–11 UNC	**BAS-308-N-W1**
		2320	2.87	1.08	5.00	5.39	2.44	4.19	1.97	1.18		513.26			
76	3	160	63	27,5	127	137	61,9	106,4	50	30	2-1/2 (40)	233,3	M16	5/8–11 UNC	**BAS-308-N40-W1**
		2320	2.48	1.08	5.00	5.39	2.44	4.19	1.97	1.18		513.26			
89	3-1/2	35	89	27,5	138	155	69,8	120,7	50	30	3-1/2	253,0	M16	5/8–11 UNC	**BAS-309-N-W1**
		508	3.50	1.08	5.43	6.10	2.75	4.75	1.97	1.18		556.60			
102	4	35	99	27,5	147	163	77,8	130,2	50	30	4	287,6	M16	5/8–11 UNC	**BAS-310-N-W1**
		508	3.90	1.08	5.79	6.42	3.06	5.13	1.97	1.18		632.72			
127	5	35	120	28	180	184	92	152,4	50	30	5	379,2	M16	5/8–11 UNC	**BAS-309-N-W1**
		508	4.72	1.10	7.09	7.24	3.62	6.00	1.97	1.18		834.24			

Materials / Ordering Options / Examples

* SAE Single-Part Counterflange made of Steel S355J2 or equivalent, blank (oiled) with Metric tapped holes **BAS-...-N-W1**
* SAE Single-Part Counterflange made of Stainless Steel V4A – 1.4404 (on request) with Metric tapped holes **BAS-...-N-W5**
* SAE Single-Part Counterflange made of Steel S355J2 or equivalent, blank (oiled) with size of Metric tapped holes deviating from the standard (e.g. M14) **BAS-...-N-M14-W1**
* SAE Single-Part Counterflange made of Steel S355J2 or equivalent, blank (oiled) with UNC tapped holes **BAS-...-N-U-W1**
* Size of connection thread deviating from the standard (e.g. 1-1/4 NPT) **BAS-...-N20-W1**

[1] The maximum working pressure PN (bar/PSI) applies only to the flange itself and depends on the bolts used (Grade 10.9). The actual maximum working pressure depends on the thickness and the quality of the tube used.

[3] Alternative options shown in brackets are available on request.

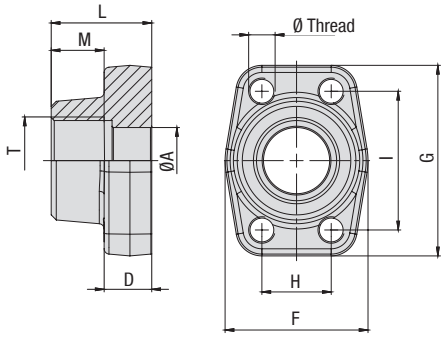

SAE Single-Part Counterflange with Female NPT Thread
Type BAS-N ▪ 6000 PSI Series

C

6000 PSI High Pressure Series (based on ISO 6162-2:2012)

Nominal Size		PN[1] (bar/PSI)	Dimensions (mm/in)									Weight (kg/lbs) ca.	Ø Thread		Ordering Codes
DN	(in)	10.9	ØA	D	F	G	H	I	L	M	T (NPT)	per 100	Metric	UNC	
13	1/2	420	13	16,5	47	57	18,2	40,5	36	15	1/2	28,7	M8	5/16–18 UNC	**BAS-601-N-W1**
		6090	.51	.65	1.85	2.24	.72	1.59	1.42	.59		63.14			
13	1/2	420	13	16,5	47	57	18,2	40,5	36	20	3/8 (06)	30,7	M8	5/16–18 UNC	**BAS-601-N06-W1**
		6090	.51	.65	1.85	2.24	.72	1.59	1.42	.79		67.54			
19	3/4	420	19	19,5	54	72	23,8	50,8	36	18	3/4	57,0	M10	3/8–16 UNC	**BAS-602-N-W1**
		6090	.75	.77	2.13	2.83	.94	2.00	1.42	.71		125.40			
19	3/4	420	14	19,5	54	72	23,8	50,8	36	15	1/2 (08)	58,9	M10	3/8–16 UNC	**BAS-602-N08-W1**
		6090	.55	.77	2.13	2.83	.94	2.00	1.42	.59		129.58			
25	1	420	25	24,5	68	82	27,8	57,2	44	20	1	83,4	M12	7/16–14 UNC	**BAS-603-N-W1**
		6090	.98	.96	2.68	3.23	1.09	2.25	1.73	.79		183.48			
25	1	420	19	24,5	68	82	27,8	57,2	44	18	3/4 (12)	89,0	M12	7/16–14 UNC	**BAS-603-N12-W1**
		6090	.75	.96	2.68	3.23	1.09	2.25	1.73	.71		195.80			
32	1-1/4	420	31	27,5	79	95	31,6	66,6	44	22	1-1/4	120,3	M12	1/2–13 UNC	**BAS-604-N-W1**
		6090	1.22	1.08	3.11	3.74	1.24	2.62	1.73	.87		264.66			
32	1-1/4	420	31	27,5	79	95	31,6	66,6	44	22	1-1/4 (20)	121,1	M14		**BAS-604-N-M14-W1**
		6090	1.22	1.08	3.11	3.74	1.24	2.62	1.73	.87		266.42			
32	1-1/4	420	25	27,5	79	95	31,6	66,6	44	20	1 (16)	118,0	M12	1/2–13 UNC	**BAS-604-N16-W1**
		6090	.98	1.08	3.11	3.74	1.24	2.62	1.73	.79		259.60			
32	1-1/4	420	25	27,5	79	95	31,6	66,6	44	20	1 (16)	125,6	M14		**BAS-604-N16-M14-W1**
		6090	.98	1.08	3.11	3.74	1.24	2.62	1.73	.79		276.32			
38	1-1/2	420	38	31,0	88	108	36,5	79,3	51	24	1-1/2	200,9	M16	5/8–11 UNC	**BAS-605-N-W1**
		6090	1.50	1.22	3.46	4.25	1.44	3.12	2.01	.94		441.98			
38	1-1/2	420	31	31,0	88	108	36,5	79,3	51	22	1-1/4 (20)	205,5	M16	5/8–11 UNC	**BAS-605-N20-W1**
		6090	1.22	1.22	3.46	4.25	1.44	3.12	2.01	.87		452.10			
51	2	420	50	37,0	118	137	44,5	96,8	58	33	2	346,8	M20	3/4–10 UNC	**BAS-606-N-W1**
		6090	1.97	1.46	4.65	5.39	1.75	3.81	2.28	1.30		762.96			

[1] The maximum working pressure PN (bar/PSI) applies only to the flange itself and depends on the bolts used (Grade 10.9). The actual maximum working pressure depends on the thickness and the quality of the tube used.

Materials / Ordering Options / Examples

* SAE Single-Part Counterflange made of Steel S355J2 or equivalent, blank (oiled) with Metric tapped holes **BAS-...-N-W1**
* SAE Single-Part Counterflange made of Stainless Steel V4A – 1.4404 (on request) with Metric tapped holes **BAS-...-N-W5**
* SAE Single-Part Counterflange made of Steel S355J2 or equivalent, blank (oiled) with size of Metric tapped holes deviating from the standard (e.g. M14) **BAS-...-N-M14-W1**
* SAE Single-Part Counterflange made of Steel S355J2 or equivalent, blank (oiled) with UNC tapped holes **BAS-...-N-U-W1**
* Size of connection thread deviating from the standard (e.g. 1-1/4 NPT) **BAS-...-N20-W1**

SAE Single-Part Flange with Female UN/UNF Thread
Type BFX-U ▪ 3000 / 6000 PSI Series

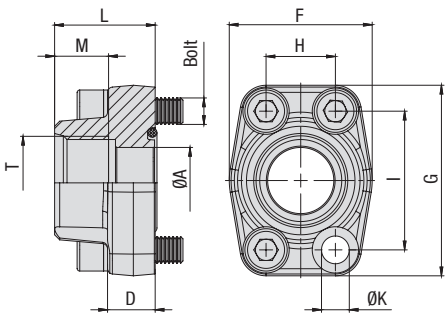

C

3000 PSI Standard Pressure Series (based on ISO 6162-1:2012)

Nominal Size DN	(in)	PN[1] (bar/PSI) 10.9	Dimensions (mm/in) ØA	D	F	G	H	I	L	M	T (UN/UNF)	ØK[3]	Weight (kg/lbs) ca. per 100	for Bolts Metric[3]	UNC	Ordering Codes
13	1/2	350	13	16	47	57	17,5	38,1	36	14,3	3/4–16 (08)	8,7	29,9	M8x30	5/16–18 UNC x 1-1/4	**BFX-301-U08-W1**
		5075	.51	.63	1.85	2.24	.69	1.50	1.42	.56		.34	65.78			
19	3/4	350	19	18	50	67	22,3	47,6	36	16,7	7/8–14 (10)	10,5	38,1	M10x35	3/8–16 UNC x 1-1/2	**BFX-302-U10-W1**
		5075	.75	.71	1.97	2.64	.88	1.87	1.42	.66		.41	83.82			
19	3/4	350	19	18	50	67	22,3	47,6	36	16,7	1-1/16–12 (12)	10,5	38,1	M10x35	3/8–16 UNC x 1-1/2	**BFX-302-U12-W1**
		5075	.75	.71	1.97	2.64	.88	1.87	1.42	.66		.41	83.82			
25	1	320	25	18	54	72	26,2	52,4	38	19	1-1/16–12 (12)	10,5	50,9	M10x35	3/8–16 UNC x 1-1/2	**BFX-303-U12-W1**
		4641	.98	.71	2.13	2.83	1.03	2.06	1.50	.75		.41	111.98			
25	1	320	25	18	54	72	26,2	52,4	38	19	1-5/16–12 (16)	10,5	47,0	M10x35	3/8–16 UNC x 1-1/2	**BFX-303-U16-W1**
		4641	.98	.71	2.13	2.83	1.03	2.06	1.50	.75		.41	103.40			
32	1-1/4	280	31	21	68	82	30,2	58,7	41	19	1-5/16–12 (16)	11,5 (13,5)	75,2	M10x40 (M12x40)	7/16–14 UNC x 1-1/2	**BFX-304-U16-W1**
		4061	1.22	.83	2.68	3.23	1.19	2.31	1.61	.75		.45 (.53)	165.44			
32	1-1/4	280	31	21	68	82	30,2	58,7	41	19	1-5/8–12 (20)	11,5 (13,5)	64,5	M10x40 (M12x40)	7/16–14 UNC x 1-1/2	**BFX-304-U20-W1**
		4061	1.22	.83	2.68	3.23	1.19	2.31	1.61	.75		.45 (.53)	141.90			
38	1-1/2	210	38	25	79	96	35,7	69,9	44	19	1-5/8–12 (20)	13,5 (14,5)	115,1	M12x45 (M14x45)	1/2–13 UNC x 1-3/4	**BFX-305-U20-W1**
		3045	1.50	.98	3.11	3.78	1.41	2.75	1.73	.75		.53 (.57)	253.22			
38	1-1/2	210	38	25	79	96	35,7	69,9	44	19	1-7/8–12 (24)	13,5 (14,5)	107,9	M12x45 (M14x45)	1/2–13 UNC x 1-3/4	**BFX-305-U24-W1**
		3045	1.50	.98	3.11	3.78	1.41	2.75	1.73	.75		.53 (.57)	237.38			

6000 PSI High Pressure Series (based on ISO 6162-2:2012)

Nominal Size DN	(in)	PN[1] (bar/PSI) 10.9	Dimensions (mm/in) ØA	D	F	G	H	I	L	M	T (UN/UNF)	ØK	Weight (kg/lbs) ca. per 100	for Bolts Metric	UNC	Ordering Codes
13	1/2	400	13	16,5	47	57	18,2	40,5	36	14,3	3/4–16 (08)	8,7	29,9	M8x30	5/16–18 UNC x 1-1/4	**BFX-601-U08-W1**
		5800	.51	.65	1.85	2.24	.72	1.59	1.42	.56		.34	65.78			
19	3/4	400	19	19,5	54	72	23,8	50,8	36	16,7	7/8–14 (10)	10,5	48,3	M10x35	3/8–16 UNC x 1-1/2	**BFX-602-U10-W1**
		5800	.75	.77	2.13	2.83	.94	2.00	1.42	.66		.41	106.26			
19	3/4	400	19	19,5	54	72	23,8	50,8	36	16,7	1-1/16–12 (12)	10,5	48,3	M10x35	3/8–16 UNC x 1-1/2	**BFX-602-U12-W1**
		5800	.75	.77	2.13	2.83	.94	2.00	1.42	.66		.41	106.26			
25	1	400	25	24,5	68	82	27,8	57,1	44	19	1-1/16–12 (12)	13	84,0	M12x45	7/16–14 UNC x 1-3/4	**BFX-603-U12-W1** [2]
		5800	.98	.96	2.68	3.23	1.09	2.25	1.73	.75		.51	184.80			
25	1	400	25	24,5	68	82	27,8	57,1	44	19	1-5/16–12 (16)	13	83,4	M12x45	7/16–14 UNC x 1-3/4	**BFX-603-U16-W1** [2]
		5800	.98	.96	2.68	3.23	1.09	2.25	1.73	.75		.51	183.48			
32	1-1/4	400	31	27,5	79	95	31,6	66,7	44	19	1-5/16–12 (16)	13,5	125,7	M12x45	1/2–13 UNC x 1-3/4	**BFX-604-U16-W1**
		5800	1.22	1.08	3.11	3.74	1.24	2.63	1.73	.75		.53	276.54			
32	1-1/4	400	31	27,5	79	95	31,6	66,7	44	19	1-5/16–12 (16)	15	125,7	M14x45		**BFX-604-U16-M14-W1**
		5800	1.22	1.08	3.11	3.74	1.24	2.63	1.73	.75		.59	276.54			
32	1-1/4	400	31	27,5	79	95	31,6	66,7	44	19	1-5/8–12 (20)	13,5	125,7	M12x45	1/2–13 UNC x 1-3/4	**BFX-604-U20-W1**
		5800	1.22	1.08	3.11	3.74	1.24	2.63	1.73	.75		.53	276.54			
32	1-1/4	400	31	27,5	79	95	31,6	66,7	44	19	1-5/8–12 (20)	15	116,0	M14x45		**BFX-604-U20-M14-W1**
		5800	1.22	1.08	3.11	3.74	1.24	2.63	1.73	.75		.59	255.20			
38	1-1/2	400	38	31	88	108	36,5	79,4	51	19	1-5/8–12 (20)	17	221,5	M16x55	5/8–11 UNC x 2-1/4	**BFX-605-U20-W1**
		5800	1.50	1.22	3.46	4.25	1.44	3.13	2.01	.75		.67	487.30			
38	1-1/2	400	38	31	88	108	36,5	79,4	51	19	1-7/8–12 (24)	17	169,9	M16x55	5/8–11 UNC x 2-1/4	**BFX-605-U24-W1**
		5800	1.50	1.22	3.46	4.25	1.44	3.13	2.01	.75		.67	373.78			

Please see Page 89 for separate Bolt Sets and Sealings.

Materials / Ordering Options / Examples

* SAE Single-Part Flange (without O-ring) made of Steel S355J2 or equivalent, blank (oiled) **BFX-...-U**-W1**
* SAE Single-Part Flange (without O-ring) made of Stainless Steel V4A – 1.4404 (on request) **BFX-...-U**-W5**

* Kit including Metric bolts 10.9, spring rings, O-ring made of NBR (Buna-N®) **BFX-...-U**-W1-K**
* Kit including Metric bolts 10.9, spring rings, O-ring made of FKM (Viton®) **BFX-...-U**-V-W1-K**
* Kit including UNC bolts (Grade 8), spring rings, O-ring made of NBR (Buna-N®) **BFX-...-U**-U-W1-K**

Please always indicate Thread Size.

[1] The maximum working pressure PN (bar/PSI) applies only to the flange itself and depends on the bolts used (Grade 10.9). The actual maximum working pressure depends on the thickness and the quality of the tube used.

[2] For UNC threaded bolts, use hexagon head bolts only. Please note that these do not belong to our product range.

[3] Alternative options shown in brackets are available on request.

SAE Single-Part Butt-Weld Flange for High Pressure Tubes (Schedule 80/160/XXS)
Type BFX-ST ▪ 3000 PSI Series

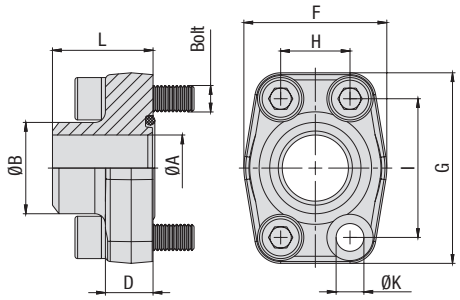

C

3000 PSI Standard Pressure Series (based on ISO 6162-1:2012)

Nominal Size		PN[1] (bar/PSI)	Dimensions (mm/in)									Weight (kg/lbs) ca.	for Bolts		Ordering Codes
DN	(in)	10.9	ØA	ØB	D	F	G	H	I	L	ØK[3]	per 100	Metric[3]	UNC	
13	1/2	350	13	21,6	16	47	57	17,5	38,1	36	8,7	26,0	M8x30	5/16–18 UNC x 1-1/4	**BFX-301-ST-21.6/13-W1**
		5075	.51	.85	.63	1.85	2.24	.69	1.50	1.42	.34	57.20			
13	1/2	350	13	17,5	16	47	57	17,5	38,1	36	8,7	24,2	M8x30	5/16–18 UNC x 1-1/4	**BFX-301-ST-17.5/13-W1**
		5075	.51	.69	.63	1.85	2.24	.69	1.50	1.42	.34	53.24			
19	3/4	350	19	27,2	18	50	67	22,3	47,6	36	10,5	35,2	M10x35	3/8–16 UNC x 1-1/2	**BFX-302-ST-28/19-W1**
		5075	.75	1.07	.71	1.97	2.64	.88	1.87	1.42	.41	77.44			
25	1	320	25	34	18	54	72	26,2	52,4	38	10,5	40,8	M10x35	3/8–16 UNC x 1-1/2	**BFX-303-ST-34/25-W1**
		4641	.98	1.34	.71	2.13	2.83	1.03	2.06	1.50	.41	89.76			
32	1-1/4	280	32	42,8	21	68	82	30,2	58,7	41	11,5 (13,5)	71,3	M10x40 (M12x40)	7/16–14 UNC x 1-1/2	**BFX-304-ST-42.8/32-W1**
		4061	1.26	1.69	.83	2.68	3.23	1.19	2.31	1.61	.45 (.53)	156.86			
38	1-1/2	210	38	48,6	25	79	96	35,7	69,9	44	13,5 (14,5)	97,3	M12x45 (M14x45)	1/2–13 UNC x 1-3/4	**BFX-305-ST-48.6/38-W1**
		3045	1.50	1.91	.98	3.11	3.78	1.41	2.75	1.73	.53 (.57)	214.06			
51	2	210	51	61	25,5	88	102	42,9	77,8	45	13,5 (14,5)	115,1	M12x45 (M14x45)	1/2–13 UNC x 1-3/4	**BFX-306-ST-61/51-W1**
		3045	2.01	2.40	1.00	3.46	4.02	1.69	3.06	1.77	.53 (.57)	253.22			
64	2-1/2	175	63	77	26	101	115	50,8	88,9	50	13,5 (14,5)	153,2	M12x45 (M14x45)	1/2–13 UNC x 1-3/4	**BFX-307-ST-77/63-W1**
		2538	2.48	3.03	1.02	3.98	4.53	2.00	3.50	1.97	.53 (.57)	337.04			
76	3	160	73	92	27,5	127	137	61,9	106,4	50	17	229,0	M16x50	5/8–11 UNC x 2	**BFX-308-ST-92/73-W1**
		2320	2.87	3.62	1.08	5.00	5.39	2.44	4.19	1.97	.67	503.80			
89	3-1/2	35	89	103	27,5	138	155	69,9	120,7	50	17	259,1	M16x50	5/8–11 UNC x 2	**BFX-309-ST-103/89-W1**
		508	3.50	4.06	1.08	5.43	6.10	2.75	4.75	1.97	.67	570.02			
102	4	35	99	115,5	27,5	147	163	77,8	130,2	50	17	286,5	M16x50	5/8–11 UNC x 2	**BFX-310-ST-115.5/99-W1**
		508	3.90	4.55	1.08	5.79	6.42	3.06	5.13	1.97	.67	630.30			
127	5	35	120	140,2	28	180	184	92	152,4	50	17	398,6	M16x55	5/8–11 UNC x 2-1/4	**BFX-311-ST-140.2/120-W1**
		508	4.72	5.52	1.10	7.09	7.24	3.62	6.00	1.97	.67	876.92			

Please see Page 89 for separate Bolt Sets and Sealings.

Materials / Ordering Options / Examples

* SAE Single-Part Flange (without O-ring) made of Steel S355J2 or equivalent, blank (oiled) **BFX-...-ST-**/**-W1**
* SAE Single-Part Flange (without O-ring) made of Stainless Steel V4A – 1.4404 (on request) **BFX-...-ST-**/**-W5**

* Kit including Metric bolts 10.9, spring rings, O-ring made of NBR (Buna-N®) **BFX-...-ST-**/**-W1-K**
* Kit including Metric bolts 10.9, spring rings, O-ring made of FKM (Viton®) **BFX-...-ST-**/**-V-W1-K**
* Kit including UNC bolts (Grade 8), spring rings, O-ring made of NBR (Buna-N®) **BFX-...-ST-**/**-U-W1-K**

Please always indicate ØB / ØA.

[1] The maximum working pressure PN (bar/PSI) applies only to the flange itself and depends on the bolts used (Grade 10.9). The actual maximum working pressure depends on the thickness and the quality of the tube used.

[3] Alternative options shown in brackets are available on request.

SAE Single-Part Butt-Weld Flange for High Pressure Tubes (Schedule 80/160/XXS)
Type BFX-ST ▪ 6000 PSI Series

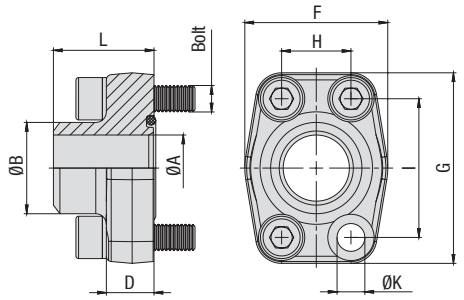

6000 PSI High Pressure Series (based on ISO 6162-2:2012)

Nominal Size DN	(in)	PN[1] (bar/PSI) 10.9	Dimensions (mm/in) ØA	ØB	D	F	G	H	I	L	ØK	Weight (kg/lbs) ca. per 100	for Bolts Metric	UNC	Ordering Codes
13	1/2	420	13	21,6	16,5	47	57	18,2	40,5	36	8,7	33,3	M8x30	5/16–18 UNC x 1-1/4	**BFX-601-ST-21.6/13-W1**
		6090	.51	.85	.65	1.85	2.24	.72	1.59	1.42	.34	73.26			
13	1/2	420	13	17,5	16,5	47	57	18,2	40,5	36	8,7	24,2	M8x30	5/16–18 UNC x 1-1/4	**BFX-601-ST-17.5/13-W1**
		6090	.51	.69	.65	1.85	2.24	.72	1.59	1.42	.34	53.24			
19	3/4	420	19	28	19,5	54	72	23,8	50,8	36	10,5	49,4	M10x35	3/8–16 UNC x 1-1/2	**BFX-602-ST-28/19-W1**
		6090	.75	1.10	.77	2.13	2.83	.94	2.00	1.42	.41	108.68			
25	1	420	25	34	24,5	68	82	27,8	57,2	41	13	64,1	M12x45	7/16–14 UNC x 1-3/4	**BFX-603-ST-34/25-W1** [2]
		6090	.98	1.34	.96	2.68	3.23	1.09	2.25	1.61	.51	141.02			
32	1-1/4	420	32	42,8	27,5	79	95	31,8	66,6	44	13,5	101,3	M12x45	1/2–13 UNC x 1-3/4	**BFX-604-ST-42.8/32-W1**
		6090	1.26	1.69	1.08	3.11	3.74	1.25	2.62	1.73	.53	222.86			
32	1-1/4	420	32	42,8	27,5	79	95	31,8	66,6	44	15	98,1	M14x45		**BFX-604-ST-42.8/32-M14-W1**
		6090	1.26	1.69	1.08	3.11	3.74	1.25	2.62	1.73	.59	215.82			
32	1-1/4	420	29	42,8	27,5	79	95	31,8	66,6	44	13,5	112,8	M12x45	1/2–13 UNC x 1-3/4	**BFX-604-ST-42.8/29-W1** (SCH 160)
		6090	1.14	1.69	1.08	3.11	3.74	1.25	2.62	1.73	.53	248.16			
32	1-1/4	420	29	42,8	27,5	79	95	31,8	66,6	44	15	100,8	M14x45		**BFX-604-ST-42.8/29-M14-W1**
		6090	1.14	1.69	1.08	3.11	3.74	1.25	2.62	1.73	.59	221.76			
38	1-1/2	420	38	48,6	31	88	108	36,5	79,3	56	17	168,2	M16x55	5/8–11 UNC x 2-1/4	**BFX-605-ST-48.6/38-W1**
		6090	1.50	1.91	1.22	3.46	4.25	1.44	3.12	2.20	.67	370.04			
38	1-1/2	420	32	48,6	31	88	108	36,5	79,3	56	17	170,9	M16x55	5/8–11 UNC x 2-1/4	**BFX-605-ST-48.6/32-W1** (SCH 160)
		6090	1.26	1.91	1.22	3.46	4.25	1.44	3.12	2.20	.67	375.98			
51	2	420	51	61	37	118	137	44,5	96,8	65	21	284,5	M20x70	3/4–10 UNC x 2-3/4	**BFX-606-ST-61/51-W1**
		6090	2.01	2.40	1.46	4.65	5.39	1.75	3.81	2.56	.83	625.90			
51	2	420	43	61	37	118	137	44,5	96,8	65	21	316,4	M20x70	3/4–10 UNC x 2-3/4	**BFX-606-ST-61/43-W1** (SCH 160)
		6090	1.69	2.40	1.46	4.65	5.39	1.75	3.81	2.56	.83	696.08			
64	2-1/2	420	51	76,1	45	150	180	58,7	123,8	80	26	727,7	M24x80		**BFX-607-ST-76.1/51-W1**
		6090	2.01	3.00	1.77	5.91	7.09	2.31	4.87	3.15	1.02	1600.94			
64	2-1/2	420	60	90	45	152	180	58,7	123,8	80	26	730,0	M24x80		**BFX-607-ST-90/60-W1** (SCH XXS)
		6090	2.36	3.54	1.77	5.98	7.09	2.31	4.87	3.15	1.02	1606.00			
76	3	420	90	67,7	55	178	208	71,4	152,4	90	33	1305,0	M30x100		**BFX-608-ST-90/67-W1** (SCH 160)
		6090	3.54	2.67	2.17	7.00	8.19	2.81	6.00	3.54	1.30	2871.00			
76	3	420	90	58,4	55	178	208	71,4	152,4	90	33	1305,0	M30x100		**BFX-608-ST-90/58-W1** (SCH XXS)
		6090	3.54	2.30	2.17	7.00	8.19	2.81	6.00	3.54	1.30	2871.00			

Please see Page 89 for separate Bolt Sets and Sealings.

[1] The maximum working pressure PN (bar/PSI) applies only to the flange itself and depends on the bolts used (Grade 10.9). The actual maximum working pressure depends on the thickness and the quality of the tube used.

[2] For UNC threaded bolts, use hexagon head bolts only. Please note that these do not belong to our product range.

Materials / Ordering Options / Examples

* SAE Single-Part Flange (without O-ring) made of Steel S355J2 or equivalent, blank (oiled) — **BFX-...-ST-**/**-W1**
* SAE Single-Part Flange (without O-ring) made of Stainless Steel V4A – 1.4404 (on request) — **BFX-...-ST-**/**-W5**

* Kit including Metric bolts 10.9, spring rings, O-ring made of NBR (Buna-N®) — **BFX-...-ST-**/**-W1-K**
* Kit including Metric bolts 10.9, spring rings, O-ring made of FKM (Viton®) — **BFX-...-ST-**/**-V-W1-K**
* Kit including UNC bolts (Grade 8), spring rings, O-ring made of NBR (Buna-N®) — **BFX-...-ST-**/**-U-W1-K**

Please always indicate ØB / ØA.

SAE Single-Part Butt-Weld Counterflange for High Pressure Tubes (Schedule 80/160/XXS)
Type BAS-ST ▪ 3000 PSI Series

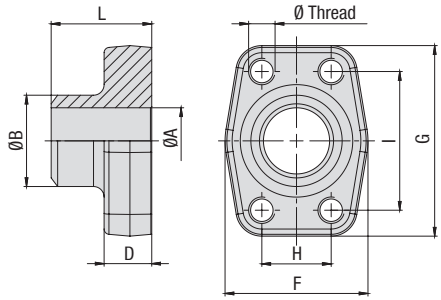

C

3000 PSI Standard Pressure Series (based on ISO 6162-1:2012)

Nominal Size DN	(in)	PN[1] (bar/PSI) 10.9	Dimensions (mm/in) ØA	ØB	D	F	G	H	I	L	Weight (kg/lbs) ca. per 100	Ø Thread Metric[3]	UNC	Ordering Codes
13	1/2	350	13	21,6	16	47	57	17,5	38,1	36	26,3	M8	5/16–18 UNC	BAS-301-ST-21.6/13-W1
		5075	.51	.85	.63	1.85	2.24	.69	1.50	1.42	57.86			
13	1/2	350	13	17,5	16	47	57	17,5	38,1	36	25,8	M8	5/16–18 UNC	BAS-301-ST-17.5/13-W1
		5075	.51	.69	.63	1.85	2.24	.69	1.50	1.42	56.76			
19	3/4	350	19	27,2	18	50	67	22,3	47,6	36	36,6	M10	3/8–16 UNC	BAS-302-ST-28/19-W1
		5075	.75	1.07	.71	1.97	2.64	.88	1.87	1.42	80.52			
25	1	320	25	34	18	54	72	26,2	52,4	38	43,1	M10 (M12)	3/8–14 UNC	BAS-303-ST-34/25-W1
		4641	.98	1.34	.71	2.13	2.83	1.03	2.06	1.50	94.82			
32	1-1/4	280	32	42,8	21	68	82	30,2	58,7	41	67,5	M10 (M12)	3/8–14 UNC	BAS-304-ST-42.8/32-W1
		4061	1.26	1.69	.83	2.68	3.23	1.19	2.31	1.61	148.50			
38	1-1/2	210	38	48,6	25	79	96	35,7	69,9	44	103,4	M12 (M14)	1/2–13 UNC	BAS-305-ST-48.6/38-W1
		3045	1.50	1.91	.98	3.11	3.78	1.41	2.75	1.73	227.48			
51	2	210	51	61	25,5	88	102	42,9	77,8	45	122,7	M12 (M14)	1/2–13 UNC	BAS-306-ST-61/51-W1
		3045	2.01	2.40	1.00	3.46	4.02	1.69	3.06	1.77	269.94			
64	2-1/2	175	63	77	26	101	115	50,8	88,9	50	155,8	M12 (M14)	1/2–13 UNC	BAS-307-ST-77/63-W1
		2538	2.48	3.03	1.02	3.98	4.53	2.00	3.50	1.97	342.76			
76	3	160	73	92	27,5	127	137	61,9	106,4	50	236,0	M16	5/8–11 UNC	BAS-308-ST-92/73-W1
		2320	2.87	3.62	1.08	5.00	5.39	2.44	4.19	1.97	519.20			
89	3-1/2	35	89	103	27,5	138	155	69,9	120,7	50	267,3	M16	5/8–11 UNC	BAS-309-ST-103/89-W1
		508	3.50	4.06	1.08	5.43	6.10	2.75	4.75	1.97	588.06			
102	4	35	99	115,5	27,5	147	163	77,8	130,2	50	291,3	M16	5/8–11 UNC	BAS-310-ST-115.5/99-W1
		508	3.90	4.55	1.08	5.79	6.42	3.06	5.13	1.97	640.86			
127	5	35	120	140,2	28	180	184	92	152,4	50	416,1	M16	5/8–11 UNC	BAS-311-ST-140.2/120-W1
		508	4.72	5.52	1.10	7.09	7.24	3.62	6.00	1.97	915.42			

Materials / Ordering Options / Examples

* SAE Single-Part Counterflange made of Steel S355J2 or equivalent, blank (oiled) with Metric tapped holes — **BAS-...-ST-**/**-W1**
* SAE Single-Part Counterflange made of Stainless Steel V4A – 1.4404 (on request) with Metric tapped holes — **BAS-...-ST-**/**-W5**
* SAE Single-Part Counterflange made of Steel S355J2 or equivalent, blank (oiled) with size of Metric tapped holes deviating from the standard (e.g. M14) — **BAS-...-ST-**/**-M14-W1**
* SAE Single-Part Counterflange made of Steel S355J2 or equivalent, blank (oiled) with UNC tapped holes — **BAS-...-ST-**/**-U-W1**

Please always indicate ØB / ØA.

[1] The maximum working pressure PN (bar/PSI) applies only to the flange itself and depends on the bolts used (Grade 10.9). The actual maximum working pressure depends on the thickness and the quality of the tube used.

[3] Alternative options shown in brackets are available on request.

SAE Single-Part Butt-Weld Counterflange for High Pressure Tubes (Schedule 80/160/XXS)
Type BAS-ST ▪ 6000 PSI Series

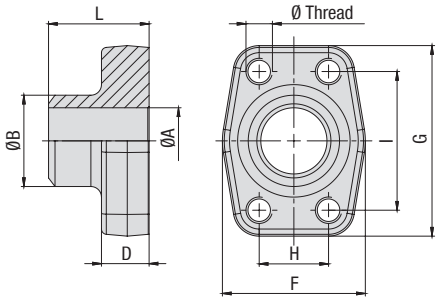

6000 PSI High Pressure Series (based on ISO 6162-2:2012)

Nominal Size		PN[1] (bar/PSI)	Dimensions (mm/in)								Weight (kg/lbs) ca.	Ø Thread		Ordering Codes
DN	(in)	10.9	ØA	ØB	D	F	G	H	I	L	per 100	Metric	UNC	
13	1/2	420	13	21,6	16,5	47	57	18,2	40,5	36	27,8	M8	5/16–18 UNC	BAS-601-ST-21.6/13-W1
		6090	.51	.85	.65	1.85	2.24	.72	1.59	1.42	61.16			
13	1/2	420	13	17,5	16,5	47	57	18,2	40,5	36	26,1	M8	5/16–18 UNC	BAS-601-ST-17.5/13-W1
		6090	.51	.69	.65	1.85	2.24	.72	1.59	1.42	57.42			
19	3/4	420	19	28	19,5	54	72	23,8	50,8	36	49,0	M10	3/8–16 UNC	BAS-602-ST-28/19-W1
		6090	.75	1.10	.77	2.13	2.83	.94	2.00	1.42	107.80			
25	1	420	25	34	24,5	68	82	27,8	57,2	41	67,5	M12	7/16–14 UNC	BAS-603-ST-34/25-W1
		6090	.98	1.34	.96	2.68	3.23	1.09	2.25	1.61	148.50			
32	1-1/4	420	32	42,8	27,5	79	95	31,8	66,6	44	106,3	M12	1/2–13 UNC	BAS-604-ST-42.8/32-W1
		6090	1.26	1.69	1.08	3.11	3.74	1.25	2.62	1.73	233.86			
32	1-1/4	420	32	42,8	27,5	79	95	31,8	66,6	44	103,2	M14		BAS-604-ST-42.8/32-M14-W1
		6090	1.26	1.69	1.08	3.11	3.74	1.25	2.62	1.73	227.04			
32	1-1/4	420	29	42,8	27,5	79	95	31,8	66,6	44	101,0	M12	1/2–13 UNC	BAS-604-ST-42.8/29-W1 (SCH 160)
		6090	1.14	1.69	1.08	3.11	3.74	1.25	2.62	1.73	222.20			
32	1-1/4	420	29	42,8	27,5	79	95	31,8	66,6	44	113,3	M14		BAS-604-ST-42.8/29-M14-W1
		6090	1.14	1.69	1.08	3.11	3.74	1.25	2.62	1.73	249.26			
38	1-1/2	420	38	48,3	31	88	108	36,5	79,3	56	182,4	M16	5/8–11 UNC	BAS-605-ST-48.6/38-W1
		6090	1.50	1.90	1.22	3.46	4.25	1.44	3.12	2.20	401.28			
38	1-1/2	420	32	48,3	31	88	108	36,5	79,3	56	180,0	M16	5/8–11 UNC	BAS-605-ST-48.6/32-W1 (SCH 160)
		6090	1.26	1.90	1.22	3.46	4.25	1.44	3.12	2.20	396.00			
51	2	420	51	61	37	118	137	44,5	96,8	65	287,3	M20	3/4–10 UNC	BAS-606-ST-61/51-W1
		6090	2.01	2.40	1.46	4.65	5.39	1.75	3.81	2.56	632.06			
51	2	420	43	61	37	118	137	44,5	96,8	65	326,6	M20	3/4–10 UNC	BAS-606-ST-61/43-W1 (SCH 160)
		6090	1.69	2.40	1.46	4.65	5.39	1.75	3.81	2.56	718.52			
64	2-1/2	420	51	76,1	45	150	180	58,7	123,8	80	728,0	M24		BAS-607-ST-76.1/51-W1
		6090	2.01	3.00	1.77	5.91	7.09	2.31	4.87	3.15	1601.60			
64	2-1/2	420	60,5	90	45	152	180	58,7	123,8	80	751,5	M24		BAS-607-ST-90/60.5-W1 (SCH XXS)
		6090	2.38	3.54	1.77	5.98	7.09	2.31	4.87	3.15	1653.30			
76	3	420	67	90	55	178	208	71,4	152,4	90	1305,0	M30		BAS-608-ST-90/67-W1 (SCH 160)
		6090	2.64	3.54	2.17	7.00	8.19	2.81	6.00	3.54	2871.00			
76	3	420	58	90	55	178	208	71,4	152,4	90	1305,0	M30		BAS-608-ST-90/58-W1 (SCH XXS)
		6090	2.28	3.54	2.17	7.00	8.19	2.81	6.00	3.54	2871.00			

[1] The maximum working pressure PN (bar/PSI) applies only to the flange itself and depends on the bolts used (Grade 10.9). The actual maximum working pressure depends on the thickness and the quality of the tube used.

Materials / Ordering Options / Examples

* SAE Single-Part Counterflange made of Steel S355J2 or equivalent, blank (oiled) with Metric tapped holes — **BAS-...-ST-**/**-W1**
* SAE Single-Part Counterflange made of Stainless Steel V4A – 1.4404 (on request) with Metric tapped holes — **BAS-...-ST-**/**-W5**
* SAE Single-Part Counterflange made of Steel S355J2 or equivalent, blank (oiled) with size of Metric tapped holes deviating from the standard (e.g. M14) — **BAS-...-ST-**/**-M14-W1**
* SAE Single-Part Counterflange made of Steel S355J2 or equivalent, blank (oiled) with UNC tapped holes — **BAS-...-ST-**/**-U-W1**

Please always indicate ØB / ØA.

SAE Single-Part Butt-Weld Flange for Low Pressure Tubes (Schedule 40)
Type BFX-STRE ▪ 3000 PSI Series

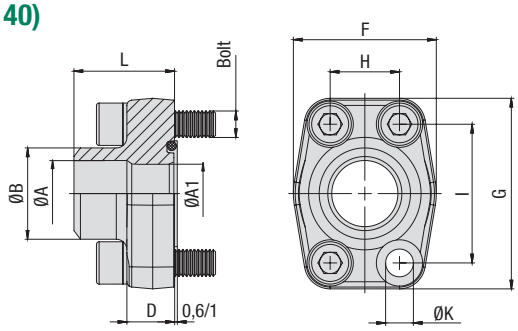

C

3000 PSI Standard Pressure Series (based on ISO 6162-1:2012)

Nominal Size DN	(in)	PN[1] (bar/PSI) 10.9	Dimensions (mm/in) ØA	ØA1	ØB	D	F	G	H	I	L	ØK[3]	Weight (kg/lbs) ca. per 100	for Bolts Metric[3]	UNC	Ordering Codes
13	1/2	350	16	13	22	16	47	57	17,5	38,1	36	8,7	25,6	M8x30	5/16–18 UNC x 1-1/4	**BFX-301-STRE-22/16-W1**
		5075	.63	.51	.87	.63	1.85	2.24	.69	1.50	1.42	.34	56.32			
19	3/4	350	21,5	19	28	18	50	67	22,3	47,6	36	10,5	34,0	M10x35	3/8–16 UNC x 1-1/2	**BFX-302-STRE-28/21.5-W1**
		5075	.85	.75	1.10	.71	1.97	2.64	.88	1.87	1.42	.41	74.80			
25	1	320	27	25	35	18	54	72	26,2	52,4	38	10,5	40,0	M10x35	3/8–16 UNC x 1-1/2	**BFX-303-STRE-35/27-W1**
		4641	1.06	.98	1.38	.71	2.13	2.83	1.03	2.06	1.50	.41	88.00			
32	1-1/4	280	36	31	43	21	68	82	30,2	58,7	41	11,5 (13,5)	61,7	M10x40 (M12x40)	7/16–14 UNC x 1-1/2	**BFX-304-STRE-43/36-W1**
		4061	1.42	1.22	1.69	.83	2.68	3.23	1.19	2.31	1.61	.45 (.53)	135.74			
38	1-1/2	210	42	38	49	25	79	96	35,7	69,9	44	13,5 (14,5)	92,8	M12x45 (M14x45)	1/2–13 UNC x 1-3/4	**BFX-305-STRE-49/42-W1**
		3045	1.65	1.50	1.93	.98	3.11	3.78	1.41	2.75	1.73	.53 (.57)	204.16			
51	2	210	42	42	49	25,5	88	102	42,9	77,8	45	13,5 (14,5)	116,4	M12x45 (M14x45)	1/2–13 UNC x 1-3/4	**BFX-306-STRE-49/42-W1**
		3045	1.65	1.65	1.93	1.00	3.46	4.02	1.69	3.06	1.77	.53 (.57)	256.08			
51	2	210	53	49	61	25,5	88	102	42,9	77,8	45	13,5 (14,5)	115,8	M12x45 (M14x45)	1/2–13 UNC x 1-3/4	**BFX-306-STRE-61/53-W1**
		3045	2.09	1.93	2.40	1.00	3.46	4.02	1.69	3.06	1.77	.53 (.57)	254.76			
64	2-1/2	175	53	53	61	26	101	115	50,8	88,9	50	13,5 (14,5)	148,3	M12x45 (M14x45)	1/2–13 UNC x 1-3/4	**BFX-307-STRE-61/53-W1**
		2538	2.09	2.09	2.40	1.02	3.98	4.53	2.00	3.50	1.97	.53 (.57)	326.26			
64	2-1/2	175	70	62	77	26	101	115	50,8	88,9	50	13,5 (14,5)	143,2	M12x45 (M14x45)	1/2–13 UNC x 1-3/4	**BFX-307-STRE-77/70-W1**
		2538	2.76	2.44	3.03	1.02	3.98	4.53	2.00	3.50	1.97	.53 (.57)	315.04			
76	3	160	82	74	90	27,5	127	137	61,9	106,4	50	17	200,0	M16x50	5/8–11 UNC x 2	**BFX-308-STRE-90/82-W1**
		2320	3.23	2.91	3.54	1.08	5.00	5.39	2.44	4.19	1.97	.67	440.00			
89	3-1/2	35	82	82	90	27,5	138	155	69,9	120,7	50	17	244,0	M16x50	5/8–11 UNC x 2	**BFX-309-STRE-90/82-W1**
		508	3.23	3.23	3.54	1.08	5.43	6.10	2.75	4.75	1.97	.67	536.80			
89	3-1/2	35	70	70	77	27,5	138	155	69,9	120,7	50	17	243,6	M16x50	5/8–11 UNC x 2	**BFX-309-STRE-77/70-W1**
		508	2.76	2.76	3.03	1.08	5.43	6.10	2.75	4.75	1.97	.67	535.92			
102	4	35	82	82	90	27,5	147	163	77,8	130,2	50	17	283,1	M16x50	5/8–11 UNC x 2	**BFX-310-STRE-90/82-W1**
		508	3.23	3.23	3.54	1.08	5.79	6.42	3.06	5.13	1.97	.67	622.82			
102	4	35	107	102	115	27,5	147	163	77,8	130,2	50	17	254,3	M16x50	5/8–11 UNC x 2	**BFX-310-STRE-115/107-W1**
		508	4.21	4.02	4.53	1.08	5.79	6.42	3.06	5.13	1.97	.67	559.46			
127	5	35	131	120	140,2	28	180	184	92	152,4	50	17	381,9	M16x55	5/8–11 UNC x 2-1/4	**BFX-311-STRE-140/131-W1**
		508	5.16	4.72	5.52	1.10	7.09	7.24	3.62	6.00	1.97	.67	840.18			

Please see Page 89 for separate Bolt Sets and Sealings.

Materials / Ordering Options / Examples

* SAE Single-Part Flange (without O-ring) made of Steel S355J2 or equivalent, blank (oiled) — **BFX-...-STRE-**/**-W1**
* SAE Single-Part Flange (without O-ring) made of Stainless Steel V4A – 1.4404 (on request) — **BFX-...-STRE-**/**-W5**

* Kit including Metric bolts 10.9, spring rings, O-ring made of NBR (Buna-N®) — **BFX-...-STRE-**/**-W1-K**
* Kit including Metric bolts 10.9, spring rings, O-ring made of FKM (Viton®) — **BFX-...-STRE-**/**-V-W1-K**
* Kit including UNC bolts (Grade 8), spring rings, O-ring made of NBR (Buna-N®) — **BFX-...-STRE-**/**-U-W1-K**

Please always indicate ØB / ØA.

[1] The maximum working pressure PN (bar/PSI) applies only to the flange itself and depends on the bolts used (Grade 10.9). The actual maximum working pressure depends on the thickness and the quality of the tube used.

[3] Alternative options shown in brackets are available on request.

SAE Single-Part Butt-Weld Counterflange for Low Pressure Tubes (Schedule 40)
Type BAS-STRE ▪ 3000 PSI Series

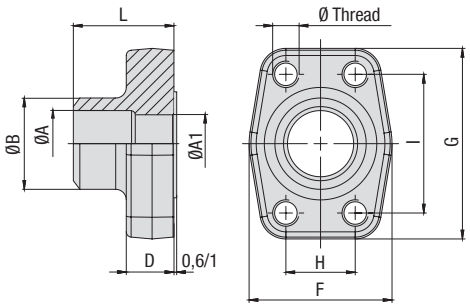

3000 PSI Standard Pressure Series (based on ISO 6162-1:2012)

Nominal Size		PN[1] (bar/PSI)	Dimensions (mm/in)									Weight (kg/lbs) ca.	for Bolts		Ordering Codes
DN	(in)	10.9	ØA	ØA1	ØB	D	F	G	H	I	L	per 100	Metric[3]	UNC	
13	1/2	350	16	13	22	16	47	57	17,5	38,1	36	26,7	M8	5/16–18 UNC	BAS-301-STRE-22/16-W1
		5075	.63	.51	.87	.63	1.85	2.24	.69	1.50	1.42	58.74			
19	3/4	350	21,5	19	28	18	50	67	22,3	47,6	36	36,3	M10	3/8–16 UNC	BAS-302-STRE-28/21.5-W1
		5075	.85	.75	1.10	.71	1.97	2.64	.88	1.87	1.42	79.86			
25	1	320	27	25	35	18	54	72	26,2	52,4	38	43,1	M10	3/8–16 UNC	BAS-303-STRE-35/27-W1
		4641	1.06	.98	1.38	.71	2.13	2.83	1.03	2.06	1.50	94.82			
32	1-1/4	280	36	31	43	21	68	82	30,2	58,7	41	65,3	M10 (M12)	7/16–14 UNC	BAS-304-STRE-43/36-W1
		4061	1.42	1.22	1.69	.83	2.68	3.23	1.19	2.31	1.61	143.66			
38	1-1/2	210	42	38	49	25	79	96	35,7	69,9	44	97,1	M12 (M14)	1/2–13 UNC	BAS-305-STRE-49/42-W1
		3045	1.65	1.50	1.93	.98	3.11	3.78	1.41	2.75	1.73	213.62			
51	2	210	42	42	49	25,5	88	102	42,9	77,8	45	0,0	M12 (M14)	1/2–13 UNC	BAS-306-STRE-49/42-W1
		3045	1.65	1.65	1.93	1.00	3.46	4.02	1.69	3.06	1.77	.00			
51	2	210	53	49	61	25,5	88	102	42,9	77,8	45	119,7	M12 (M14)	1/2–13 UNC	BAS-306-STRE-61/53-W1
		3045	2.09	1.93	2.40	1.00	3.46	4.02	1.69	3.06	1.77	263.34			
64	2-1/2	175	53	53	61	26	101	115	50,8	88,9	50	150,1	M12 (M14)	1/2–13 UNC	BAS-307-STRE-61/53-W1
		2538	2.09	2.09	2.40	1.02	3.98	4.53	2.00	3.50	1.97	330.22			
64	2-1/2	175	70	62	77	26	101	115	50,8	88,9	50	149,2	M12 (M14)	1/2–13 UNC	BAS-307-STRE-77/70-W1
		2538	2.76	2.44	3.03	1.02	3.98	4.53	2.00	3.50	1.97	328.24			
76	3	160	82	74	90	27,5	127	137	61,9	106,4	50	211,7	M16	5/8–11 UNC	BAS-308-STRE-90/82-W1
		2320	3.23	2.91	3.54	1.08	5.00	5.39	2.44	4.19	1.97	465.74			
89	3-1/2	35	82	82	90	27,5	138	155	69,9	120,7	50	255,1	M16	5/8–11 UNC	BAS-309-STRE-90/82-W1
		508	3.23	3.23	3.54	1.08	5.43	6.10	2.75	4.75	1.97	561.22			
89	3-1/2	35	70	70	77	27,5	138	155	69,9	120,7	50	268,9	M16	5/8–11 UNC	BAS-309-STRE-77/70-W1
		508	2.76	2.76	3.03	1.08	5.43	6.10	2.75	4.75	1.97	591.67			
102	4	35	82	82	90	27,5	147	163	77,8	130,2	50	289,2	M16	5/8–11 UNC	BAS-310-STRE-90/82-W1
		508	3.23	3.23	3.54	1.08	5.79	6.42	3.06	5.13	1.97	636.24			
102	4	35	107	102	115	27,5	147	163	77,8	130,2	50	257,4	M16	5/8–11 UNC	BAS-310-STRE-115/107-W1
		508	4.21	4.02	4.53	1.08	5.79	6.42	3.06	5.13	1.97	566.28			
127	5	35	131	120	140,2	28	180	184	92	152,4	50	383,2	M16	5/8–11 UNC	BAS-311-STRE-140/131-W1
		508	5.16	4.72	5.52	1.10	7.09	7.24	3.62	6.00	1.97	843.04			

[1] The maximum working pressure PN (bar/PSI) applies only to the flange itself and depends on the bolts used (Grade 10.9). The actual maximum working pressure depends on the thickness and the quality of the tube used.

[3] Alternative options shown in brackets are available on request.

Materials / Ordering Options / Examples

* SAE Single-Part Counterflange made of Steel S355J2 or equivalent, blank (oiled) with Metric tapped holes — **BAS-...-STRE-**/**-W1**
* SAE Single-Part Counterflange made of Stainless Steel V4A – 1.4404 (on request) with Metric tapped holes — **BAS-...-STRE-**/**-W5**
* SAE Single-Part Counterflange made of Steel S355J2 or equivalent, blank (oiled) with size of Metric tapped holes deviating from the standard (e.g. M14) — **BAS-...-STRE-**/**-M14-W1**
* SAE Single-Part Counterflange made of Steel S355J2 or equivalent, blank (oiled) with UNC tapped holes — **BAS-...-STRE-**/**-U-W1**

Please always indicate ØB / ØA.

SAE Single-Part Butt-Weld Flange for Metric Tubes
Type BFX-SRE ▪ 3000 PSI Series

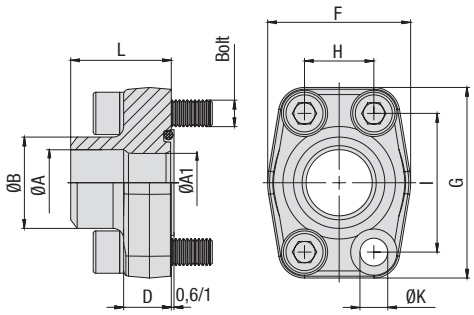

C

3000 PSI Standard Pressure Series (based on ISO 6162-1:2012)

Nominal Size		PN[1] (bar/PSI)	Dimensions (mm/in)										Weight (kg/lbs) ca.	for Bolts		Ordering Codes
DN	(in)	10.9	ØA	ØA1	ØB	D	F	G	H	I	L	ØK[3]	per 100	Metric[3]	UNC	
13	1/2	350	14	14	20	16	47	57	17,5	38,1	36	8,7	24,4	M8x30	5/16–18 UNC x 1-1/4	**BFX-301-SRE-20/14-W1**
		5075	.55	.55	.79	.63	1.85	2.24	.69	1.50	1.42	.34	53.68			
13	1/2	350	16	13	22	16	47	57	17,5	38,1	36	8,7	24,9	M8x30	5/16–18 UNC x 1-1/4	**BFX-301-SRE-22/16-W1**
		5075	.63	.51	.87	.63	1.85	2.24	.69	1.50	1.42	.34	54.78			
19	3/4	350	19	19	25	18	50	67	22,3	47,6	36	10,5	32,4	M10x35	3/8–16 UNC x 1-1/2	**BFX-302-SRE-25/19-W1**
		5075	.75	.75	.98	.71	1.97	2.64	.88	1.87	1.42	.41	71.28			
19	3/4	350	21,5	19	28	18	50	67	22,3	47,6	36	10,5	33,9	M10x35	3/8–16 UNC x 1-1/2	**BFX-302-SRE-28/21.5-W1**
		5075	.85	.75	1.10	.71	1.97	2.64	.88	1.87	1.42	.41	74.58			
25	1	320	22	22	30	18	54	72	26,2	52,4	38	10,5	41,0	M10x35	3/8–16 UNC x 1-1/2	**BFX-303-SRE-30/22-W1**
		4641	.87	.87	1.18	.71	2.13	2.83	1.03	2.06	1.50	.41	90.20			
25	1	320	27	25	35	18	54	72	26,2	52,4	38	10,5	40,6	M10x35	3/8–16 UNC x 1-1/2	**BFX-303-SRE-35/27-W1**
		4641	1.06	.98	1.38	.71	2.13	2.83	1.03	2.06	1.50	.41	89.32			
32	1-1/4	280	30	30	38	21	68	82	30,2	58,7	41	11,5 (13,5)	60,6	M10x40 (M12x40)	7/16–14 UNC x 1-1/2	**BFX-304-SRE-38/30-W1**
		4061	1.18	1.18	1.50	.83	2.68	3.23	1.19	2.31	1.61	.45 (.53)	133.32			
32	1-1/4	280	36	31	43	21	68	82	30,2	58,7	41	11,5 (13,5)	61,7	M10x40 (M12x40)	7/16–14 UNC x 1-1/2	**BFX-304-SRE-43/36-W1**
		4061	1.42	1.22	1.69	.83	2.68	3.23	1.19	2.31	1.61	.45 (.53)	135.74			
38	1-1/2	210	30	30	38	25	79	96	35,7	69,9	44	13,5 (14,5)	97,4	M12x45 (M14x45)	1/2–13 UNC x 1-3/4	**BFX-305-SRE-38/30-W1**
		3045	1.18	1.18	1.50	.98	3.11	3.78	1.41	2.75	1.73	.53 (.57)	214.28			
38	1-1/2	210	36	36	42	25	79	96	35,7	69,9	44	13,5 (14,5)	91,3	M12x45 (M14x45)	1/2–13 UNC x 1-3/4	**BFX-305-SRE-42/36-W1**
		3045	1.42	1.42	1.65	.98	3.11	3.78	1.41	2.75	1.73	.53 (.57)	200.86			
38	1-1/2	210	38	38	49	25	79	96	35,7	69,9	44	13,5 (14,5)	95,8	M12x45 (M14x45)	1/2–13 UNC x 1-3/4	**BFX-305-SRE-49/38-W1**
		3045	1.50	1.50	1.93	.98	3.11	3.78	1.41	2.75	1.73	.53 (.57)	210.76			
51	2	210	49	49	61	25,5	88	102	42,9	77,8	45	13,5 (14,5)	118,4	M12x45 (M14x45)	1/2–13 UNC x 1-3/4	**BFX-306-SRE-61/49-W1**
		3045	1.93	1.93	2.40	1.00	3.46	4.02	1.69	3.06	1.77	.53 (.57)	260.48			
64	2-1/2	175	62	62	77	26	101	115	50,8	88,9	50	13,5 (14,5)	152,1	M12x45 (M14x45)	1/2–13 UNC x 1-3/4	**BFX-307-SRE-77/62-W1**
		2538	2.44	2.44	3.03	1.02	3.98	4.53	2.00	3.50	1.97	.53 (.57)	334.62			
76	3	160	62	62	77	27,5	127	137	61,9	106,4	50	17	229,3	M16x50	5/8–11 UNC x 2	**BFX-308-SRE-77/62-W1**
		2320	2.44	2.44	3.03	1.08	5.00	5.39	2.44	4.19	1.97	.67	504.46			

Please see Page 89 for separate Bolt Sets and Sealings.

Materials / Ordering Options / Examples

* SAE Single-Part Flange (without O-ring) made of Steel S355J2 or equivalent, blank (oiled) **BFX-...-SRE-**/**-W1**
* SAE Single-Part Flange (without O-ring) made of Stainless Steel V4A – 1.4404 (on request) **BFX-...-SRE-**/**-W5**

* Kit including Metric bolts 10.9, spring rings, O-ring made of NBR (Buna-N®) **BFX-...-SRE-**/**-W1-K**
* Kit including Metric bolts 10.9, spring rings, O-ring made of FKM (Viton®) **BFX-...-SRE-**/**-V-W1-K**
* Kit including UNC bolts (Grade 8), spring rings, O-ring made of NBR (Buna-N®) **BFX-...-SRE-**/**-U-W1-K**

Please always indicate ØB / ØA.

[1] The maximum working pressure PN (bar/PSI) applies only to the flange itself and depends on the bolts used (Grade 10.9). The actual maximum working pressure depends on the thickness and the quality of the tube used.

[3] Alternative options shown in brackets are available on request.

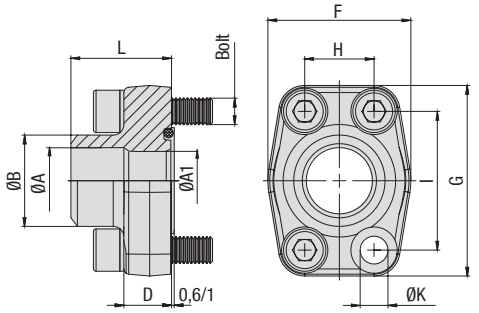

SAE Single-Part Butt-Weld Flange for Metric Tubes
Type BFX-SRE ▪ 6000 PSI Series

C

6000 PSI High Pressure Series (based on ISO 6162-2:2012)

Nominal Size DN	(in)	PN[1] (bar/PSI) 10.9	Dimensions (mm/in) ØA	ØA1	ØB	D	F	G	H	I	L	ØK	Weight (kg/lbs) ca. per 100	for Bolts Metric	UNC	Ordering Codes
13	1/2	420	14	14	20	16,5	47	57	18,2	40,5	36	8,7	24,0	M8x30	5/16–18 UNC x 1-1/4	**BFX-601-SRE-20/14-W1**
		6090	.55	.55	.79	.65	1.85	2.24	.72	1.59	1.42	.34	52.80			
19	3/4	420	14	14	20	19,5	54	72	23,8	50,8	36	10,5	48,7	M10x35	3/8–16 UNC x 1-1/2	**BFX-602-SRE-20/14-W1**
		6090	.55	.55	.79	.77	2.13	2.83	.94	2.00	1.42	.41	107.14			
19	3/4	420	17	17	25	19,5	54	72	23,8	50,8	36	10,5	48,8	M10x35	3/8–16 UNC x 1-1/2	**BFX-602-SRE-25/17-W1**
		6090	.67	.67	.98	.77	2.13	2.83	.94	2.00	1.42	.41	107.36			
25	1	420	17	17	25	24,5	68	82	27,8	57,2	44	13	72,7	M12x45	7/16–14 UNC x 1-3/4	**BFX-603-SRE-25/17-W1** [2]
		6090	.67	.67	.98	.96	2.68	3.23	1.09	2.25	1.73	.51	159.94			
25	1	420	22	22	30	24,5	68	82	27,8	57,2	44	13	72,1	M12x45	7/16–14 UNC x 1-3/4	**BFX-603-SRE-30/22-W1** [2]
		6090	.87	.87	1.18	.96	2.68	3.23	1.09	2.25	1.73	.51	158.62			
32	1-1/4	420	22	22	30	27,5	79	95	31,6	66,6	44	13,5	155,7	M12x45	1/2–13 UNC x 1-3/4	**BFX-604-SRE-30/22-W1**
		6090	.87	.87	1.18	1.08	3.11	3.74	1.24	2.62	1.73	.53	342.54			
32	1-1/4	420	22	22	30	27,5	79	95	31,6	66,6	44	15	102,8	M14x45		**BFX-604-SRE-30/22-M14-W1**
		6090	.87	.87	1.18	1.08	3.11	3.74	1.24	2.62	1.73	.59	226.16			
32	1-1/4	420	26	26	38	27,5	79	95	31,6	66,6	44	13,5	109,4	M12x45	1/2–13 UNC x 1-3/4	**BFX-604-SRE-38/26-W1**
		6090	1.02	1.02	1.50	1.08	3.11	3.74	1.24	2.62	1.73	.53	240.68			
32	1-1/4	420	26	26	38	27,5	79	95	31,6	66,6	44	15	105,0	M14x45		**BFX-604-SRE-38/26-M14-W1**
		6090	1.02	1.02	1.50	1.08	3.11	3.74	1.24	2.62	1.73	.59	231.00			
38	1-1/2	420	26	26	38	28	88	108	36,5	79,3	56	17	171,6	M16x55	5/8–11 UNC x 2-1/4	**BFX-605-SRE-38/26-W1**
		6090	1.02	1.02	1.50	1.10	3.46	4.25	1.44	3.12	2.20	.67	377.52			
38	1-1/2	420	32	32	49	28	88	108	36,5	79,3	56	17	173,7	M16x55	5/8–11 UNC x 2-1/4	**BFX-605-SRE-49/32-W1**
		6090	1.26	1.26	1.93	1.10	3.46	4.25	1.44	3.12	2.20	.67	382.14			
38	1-1/2	420	40	40	61	28	88	108	36,5	79,3	56	17	180,8	M16x55	5/8–11 UNC x 2-1/4	**BFX-605-SRE-61/40-W1**
		6090	1.57	1.57	2.40	1.10	3.46	4.25	1.44	3.12	2.20	.67	397.76			
51	2	420	40	40	61	37	118	137	44,5	96,8	65	21	317,3	M20x70	3/4–10 UNC x 2-3/4	**BFX-606-SRE-61/40-W1**
		6090	1.57	1.57	2.40	1.46	4.65	5.39	1.75	3.81	2.56	.83	698.06			
51	2	420	50	48	76	28	118	137	44,5	96,8	80	21	308,2	M20x55	3/4–10 UNC x 2-1/4	**BFX-606-SRE-76/50-W1**
		6090	1.97	1.89	2.99	1.10	4.65	5.39	1.75	3.81	3.15	.83	678.04			

Please see Page 89 for separate Bolt Sets and Sealings.

[1] The maximum working pressure PN (bar/PSI) applies only to the flange itself and depends on the bolts used (Grade 10.9). The actual maximum working pressure depends on the thickness and the quality of the tube used.

[2] For UNC threaded bolts, use hexagon head bolts only. Please note that these do not belong to our product range.

Materials / Ordering Options / Examples

* SAE Single-Part Flange (without O-ring) made of Steel S355J2 or equivalent, blank (oiled) — **BFX-...-SRE-**/**-W1**
* SAE Single-Part Flange (without O-ring) made of Stainless Steel V4A – 1.4404 (on request) — **BFX-...-SRE-**/**-W5**

* Kit including Metric bolts 10.9, spring rings, O-ring made of NBR (Buna-N®) — **BFX-...-SRE-**/**-W1-K**
* Kit including Metric bolts 10.9, spring rings, O-ring made of FKM (Viton®) — **BFX-...-SRE-**/**-V-W1-K**
* Kit including UNC bolts (Grade 8), spring rings, O-ring made of NBR (Buna-N®) — **BFX-...-SRE-**/**-U-W1-K**

Please always indicate ØB / ØA.

SAE Single-Part Butt-Weld Counterflange for Metric Tubes
Type BAS-SRE ▪ 3000 PSI Series

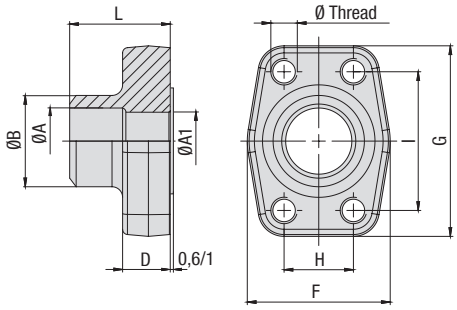

C

3000 PSI Standard Pressure Series (based on ISO 6162-1:2012)

Nominal Size DN	(in)	PN[1] (bar/PSI) 10.9	Dimensions (mm/in) ØA	ØA1	ØB	D	F	G	H	I	L	Weight (kg/lbs) ca. per 100	Ø Thread Metric[3]	UNC	Ordering Codes
13	1/2	350	14	14	20	16	47	57	17,5	38,1	36	26,1	M8	5/16–18 UNC	BAS-301-SRE-20/14-W1
		5075	.55	.55	.79	.63	1.85	2.24	.69	1.50	1.42	57.42			
13	1/2	350	16	13	22	16	47	57	17,5	38,1	36	26,7	M8	5/16–18 UNC	BAS-301-SRE-22/16-W1
		5075	.63	.51	.87	.63	1.85	2.24	.69	1.50	1.42	58.74			
19	3/4	350	19	19	25	18	50	67	22,3	47,6	36	34,5	M10	3/8–16 UNC	BAS-302-SRE-25/19-W1
		5075	.75	.75	.98	.71	1.97	2.64	.88	1.87	1.42	75.90			
19	3/4	350	21,5	19	28	18	50	67	22,3	47,6	36	35,9	M10	3/8–16 UNC	BAS-302-SRE-28/21.5-W1
		5075	.85	.75	1.10	.71	1.97	2.64	.88	1.87	1.42	78.98			
25	1	320	22	22	30	18	54	72	26,2	52,4	38	43,6	M10	3/8–16 UNC	BAS-303-SRE-30/22-W1
		4641	.87	.87	1.18	.71	2.13	2.83	1.03	2.06	1.50	95.92			
25	1	320	27	25	35	18	54	72	26,2	52,4	38	42,9	M10	3/8–16 UNC	BAS-303-SRE-35/27-W1
		4641	1.06	.98	1.38	.71	2.13	2.83	1.03	2.06	1.50	94.38			
32	1-1/4	280	30	30	38	21	68	82	30,2	58,7	41	63,9	M10 (M12)	7/16–14 UNC	BAS-304-SRE-38/30-W1
		4061	1.18	1.18	1.50	.83	2.68	3.23	1.19	2.31	1.61	140.58			
32	1-1/4	280	36	31	43	21	68	82	30,2	58,7	41	64,6	M10 (M12)	7/16–14 UNC	BAS-304-SRE-43/36-W1
		4061	1.42	1.22	1.69	.83	2.68	3.23	1.19	2.31	1.61	142.12			
38	1-1/2	210	30	30	38	25	79	96	35,7	69,9	44	101,9	M12 (M14)	1/2–13 UNC	BAS-305-SRE-38/30-W1
		3045	1.18	1.18	1.50	.98	3.11	3.78	1.41	2.75	1.73	224.18			
38	1-1/2	210	36	36	42	25	79	96	35,7	69,9	44	95,0	M12 (M14)	1/2–13 UNC	BAS-305-SRE-42/36-W1
		3045	1.42	1.42	1.65	.98	3.11	3.78	1.41	2.75	1.73	209.00			
38	1-1/2	210	38	38	49	25	79	96	35,7	69,9	44	101,6	M12 (M14)	1/2–13 UNC	BAS-305-SRE-49/38-W1
		3045	1.50	1.50	1.93	.98	3.11	3.78	1.41	2.75	1.73	223.52			
51	2	210	49	49	61	25,5	88	102	42,9	77,8	45	123,2	M12 (M14)	1/2–13 UNC	BAS-306-SRE-61/49-W1
		3045	1.93	1.93	2.40	1.00	3.46	4.02	1.69	3.06	1.77	271.04			
64	2-1/2	175	62	62	77	26	101	115	50,8	88,9	50	159,6	M12 (M14)	1/2–13 UNC	BAS-307-SRE-77/62-W1
		2538	2.44	2.44	3.03	1.02	3.98	4.53	2.00	3.50	1.97	351.12			
76	3	160	62	62	77	27,5	127	137	61,9	106,4	50	235,3	M16	5/8–11 UNC	BAS-308-SRE-77/62-W1
		2320	2.44	2.44	3.03	1.08	5.00	5.39	2.44	4.19	1.97	517.66			

Materials / Ordering Options / Examples

* SAE Single-Part Counterflange made of Steel S355J2 or equivalent, blank (oiled) with Metric tapped holes — **BAS-...-SRE-**/**-W1**
* SAE Single-Part Counterflange made of Stainless Steel V4A – 1.4404 (on request) with Metric tapped holes — **BAS-...-SRE-**/**-W5**
* SAE Single-Part Counterflange made of Steel S355J2 or equivalent, blank (oiled) with size of Metric tapped holes deviating from the standard (e.g. M14) — **BAS-...-SRE-**/**-M14-W1**
* SAE Single-Part Counterflange made of Steel S355J2 or equivalent, blank (oiled) with UNC tapped holes — **BAS-...-SRE-**/**-U-W1**

Please always indicate ØB / ØA.

[1] The maximum working pressure PN (bar/PSI) applies only to the flange itself and depends on the bolts used (Grade 10.9). The actual maximum working pressure depends on the thickness and the quality of the tube used.

[3] Alternative options shown in brackets are available on request.

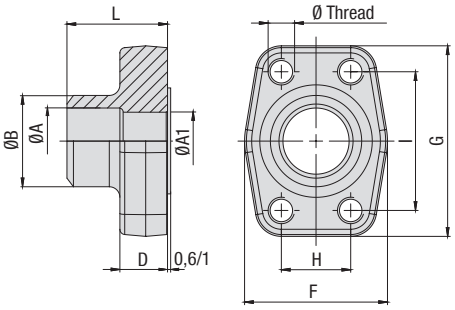

SAE Single-Part Butt-Weld Counterflange for Metric Tubes Type BAS-SRE ▪ 6000 PSI Series

C

6000 PSI High Pressure Series (based on ISO 6162-2:2012)

Nominal Size DN	(in)	PN[1] (bar/PSI) 10.9	Dimensions (mm/in) ØA	ØA1	ØB	D	F	G	H	I	L	Weight (kg/lbs) ca. per 100	for Bolts Metric	UNC	Ordering Codes
13	1/2	420	14	14	20	16,5	47	57	18,2	40,5	36	25,6	M8	5/16–18 UNC	BAS-601-SRE-20/14-W1
		6090	.55	.55	.79	.65	1.85	2.24	.72	1.59	1.42	56.32			
19	3/4	420	14	14	20	19,5	54	72	23,8	50,8	36	51,7	M10	3/8–16 UNC	BAS-602-SRE-20/14-W1
		6090	.55	.55	.79	.77	2.13	2.83	.94	2.00	1.42	113.74			
19	3/4	420	17	17	25	19,5	54	72	23,8	50,8	36	51,3	M10	3/8–16 UNC	BAS-602-SRE-25/17-W1
		6090	.67	.67	.98	.77	2.13	2.83	.94	2.00	1.42	112.86			
25	1	420	17	17	25	24,5	68	82	27,8	57,2	44	76,5	M12	7/16–14 UNC	BAS-603-SRE-25/17-W1
		6090	.67	.67	.98	.96	2.68	3.23	1.09	2.25	1.73	168.30			
25	1	420	22	22	30	24,5	68	82	27,8	57,2	44	75,7	M12	7/16–14 UNC	BAS-603-SRE-30/22-W1
		6090	.87	.87	1.18	.96	2.68	3.23	1.09	2.25	1.73	166.54			
32	1-1/4	420	22	22	30	27,5	79	95	31,6	66,6	44	103,0	M12	1/2–13 UNC	BAS-604-SRE-30/22-W1
		6090	.87	.87	1.18	1.08	3.11	3.74	1.24	2.62	1.73	226.60			
32	1-1/4	420	22	22	30	27,5	79	95	31,6	66,6	44	106,8	M14		BAS-604-SRE-30/22-M14-W1
		6090	.87	.87	1.18	1.08	3.11	3.74	1.24	2.62	1.73	234.96			
32	1-1/4	420	26	26	38	27,5	79	95	31,6	66,6	44	105,0	M12	1/2–13 UNC	BAS-604-SRE-38/26-W1
		6090	1.02	1.02	1.50	1.08	3.11	3.74	1.24	2.62	1.73	231.00			
32	1-1/4	420	26	26	38	27,5	79	95	31,6	66,6	44	110,2	M14		BAS-604-SRE-38/26-M14-W1
		6090	1.02	1.02	1.50	1.08	3.11	3.74	1.24	2.62	1.73	242.44			
38	1-1/2	420	26	26	38	28	88	108	36,5	79,3	56	177,3	M16	5/8–11 UNC	BAS-605-SRE-38/26-W1
		6090	1.02	1.02	1.50	1.10	3.46	4.25	1.44	3.12	2.20	390.06			
38	1-1/2	420	32	32	49	28	88	108	36,5	79,3	56	180,4	M16	5/8–11 UNC	BAS-605-SRE-49/32-W1
		6090	1.26	1.26	1.93	1.10	3.46	4.25	1.44	3.12	2.20	396.88			
38	1-1/2	420	40	40	61	28	88	108	36,5	79,3	56	185,5	M16	5/8–11 UNC	BAS-605-SRE-61/40-W1
		6090	1.57	1.57	2.40	1.10	3.46	4.25	1.44	3.12	2.20	408.10			
51	2	420	40	40	61	37	118	137	44,5	96,8	70	352,8	M20	3/4–10 UNC	BAS-606-SRE-61/40-W1
		6090	1.57	1.57	2.40	1.46	4.65	5.39	1.75	3.81	2.76	776.16			
51	2	420	50	48	76	28	118	137	44,5	96,8	80	105,0	M20	3/4–10 UNC	BAS-606-SRE-76/50-W1
		6090	1.97	1.89	2.99	1.10	4.65	5.39	1.75	3.81	3.15	231.00			

[1] The maximum working pressure PN (bar/PSI) applies only to the flange itself and depends on the bolts used (Grade 10.9). The actual maximum working pressure depends on the thickness and the quality of the tube used.

Materials / Ordering Options / Examples

* SAE Single-Part Counterflange made of Steel S355J2 or equivalent, blank (oiled) with Metric tapped holes — **BAS-...-SRE-**/**-W1**
* SAE Single-Part Counterflange made of Stainless Steel V4A – 1.4404 (on request) with Metric tapped holes — **BAS-...-SRE-**/**-W5**
* SAE Single-Part Counterflange made of Steel S355J2 or equivalent, blank (oiled) with size of Metric tapped holes deviating from the standard (e.g. M14) — **BAS-...-SRE-**/**-M14-W1**
* SAE Single-Part Counterflange made of Steel S355J2 or equivalent, blank (oiled) with UNC tapped holes — **BAS-...-SRE-**/**-U-W1**

Please always indicate ØB / ØA.

C

SAE Single-Part Socket-Weld Flange
Type BFX-ES ▪ 3000 PSI Series

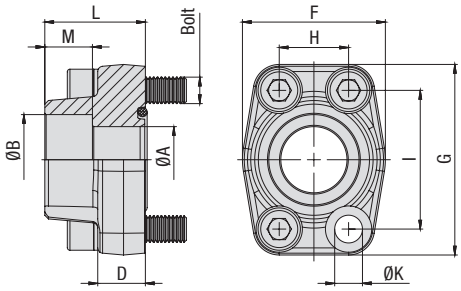

3000 PSI Standard Pressure Series (based on ISO 6162-1:2012)

Nominal Size		PN[1] (bar/PSI)	Dimensions (mm/in)										Weight (kg/lbs) ca.	for Bolts		Ordering Codes
DN	(in)	10.9	ØA	ØB	D	F	G	H	I	L	M	ØK[3]	per 100	Metric[3]	UNC	
13	1/2	350	13	21,6	16	47	57	17,5	38,1	36	18	8,7	27,7	M8x30	5/16–18 UNC x 1-1/4	**BFX-301-ES-21.6/13-W1**
		5075	.51	.85	.63	1.85	2.24	.69	1.50	1.42	.71	.34	60.94			
13	1/2	350	13	17,5	16	47	57	17,5	38,1	36	18	8,7	28,6	M8x30	5/16–18 UNC x 1-1/4	**BFX-301-ES-17.5/13-W1**
		5075	.51	.69	.63	1.85	2.24	.69	1.50	1.42	.71	.34	62.92			
13	1/2	350	13	20,3	16	47	57	17,5	38,1	36	18	8,7	28,8	M8x30	5/16–18 UNC x 1-1/4	**BFX-301-ES-20.3/13-W1**
		5075	.51	.80	.63	1.85	2.24	.69	1.50	1.42	.71	.34	63.36			
19	3/4	350	19	27,2	18	50	67	22,3	47,6	36	18	10,5	37,7	M10x35	3/8–16 UNC x 1-1/2	**BFX-302-ES-27.2/19-W1**
		5075	.75	1.07	.71	1.97	2.64	.88	1.87	1.42	.71	.41	82.94			
19	3/4	350	19	25,3	18	50	67	22,3	47,6	36	18	10,5	39,7	M10x35	3/8–16 UNC x 1-1/2	**BFX-302-ES-25.3/19-W1**
		5075	.75	1.00	.71	1.97	2.64	.88	1.87	1.42	.71	.41	87.34			
25	1	320	25	34	18	54	72	26,2	52,4	38	18	10,5	44,8	M10x35	3/8–16 UNC x 1-1/2	**BFX-303-ES-34/25-W1**
		4641	.98	1.34	.71	2.13	2.83	1.03	2.06	1.50	.71	.41	98.56			
25	1	320	25	30,3	18	54	72	26,2	52,4	38	18	10,5	47,3	M10x35	3/8–16 UNC x 1-1/2	**BFX-303-ES-30.3/25-W1**
		4641	.98	1.19	.71	2.13	2.83	1.03	2.06	1.50	.71	.41	104.06			
32	1-1/4	280	32	42,8	21	68	82	30,2	58,7	41	20	11,5 (12,5)	64,3	M10x40 (M12x40)	7/16–14 UNC x 1-1/2	**BFX-304-ES-42.8/32-W1**
		4061	1.26	1.69	.83	2.68	3.23	1.19	2.31	1.61	.79	.45 (.49)	141.46			
32	1-1/4	280	32	38,3	21	68	82	30,2	58,7	41	20	11,5 (12,5)	72,0	M10x40 (M12x40)	7/16–14 UNC x 1-1/2	**BFX-304-ES-38.3/32-W1**
		4061	1.26	1.51	.83	2.68	3.23	1.19	2.31	1.61	.79	.45 (.49)	158.40			
38	1-1/2	210	38	48,6	25	79	96	35,7	69,9	44	22	13,5 (14,5)	109,4	M12x45 (M14x45)	1/2–13 UNC x 1-3/4	**BFX-305-ES-48.6/38-W1**
		3045	1.50	1.91	.98	3.11	3.78	1.41	2.75	1.73	.87	.53 (.57)	240.68			
38	1-1/2	210	38	50,5	25	79	96	35,7	69,9	44	22	13,5 (14,5)	101,1	M12x45 (M14x45)	1/2–13 UNC x 1-3/4	**BFX-305-ES-50.5/38-W1**
		3045	1.50	1.99	.98	3.11	3.78	1.41	2.75	1.73	.87	.53 (.57)	222.42			
51	2	210	51	61	25,5	88	102	42,9	77,8	45	24	13,5 (14,5)	125,7	M12x45 (M14x45)	1/2–13 UNC x 1-3/4	**BFX-306-ES-61/51-W1**
		3045	2.01	2.40	1.00	3.46	4.02	1.69	3.06	1.77	.94	.53	276.54			
64	2-1/2	175	63	76,6	26	101	115	50,8	88,9	50	28	13,5 (14,5)	145,3	M12x45 (M14x45)	1/2–13 UNC x 1-3/4	**BFX-307-ES-76.6/63-W1**
		2538	2.48	3.02	1.02	3.98	4.53	2.00	3.50	1.97	1.10	.53 (.57)	319.66			
76	3	100	73	90,5	27,5	127	137	61,9	106,4	50	28	17	212,7	M16x50	5/8–11 UNC x 2	**BFX-308-ES-90.5/73-W1**
		1450	2.87	3.56	1.08	5.00	5.39	2.44	4.19	1.97	1.10	.67	467.94			
89	3-1/2	35	89	103	27,5	138	155	69,9	120,7	50	30	17	235,2	M16x50	5/8–11 UNC x 2	**BFX-309-ES-103/89-W1**
		508	3.50	4.06	1.08	5.43	6.10	2.75	4.75	1.97	1.18	.67	517.44			
102	4	35	99	115,5	27,5	147	163	77,8	130,2	50	30	17	282,8	M16x50	5/8–11 UNC x 2	**BFX-310-ES-115.5/99-W1**
		508	3.90	4.55	1.08	5.79	6.42	3.06	5.13	1.97	1.18	.67	622.16			
127	5	35	120	142	28	180	184	92,1	152,4	50	30	17	360,5	M16x55	5/8–11 UNC x 2-1/4	**BFX-311-ES-142/120-W1**
		508	4.72	5.59	1.10	7.09	7.24	3.63	6.00	1.97	1.18	.67	793.10			

Please see Page 89 for separate Bolt Sets and Sealings.

Materials / Ordering Options / Examples

* SAE Single-Part Flange (without O-ring) made of Steel S355J2 or equivalent, blank (oiled) **BFX-...-ES-**/**-W1**
* SAE Single-Part Flange (without O-ring) made of Stainless Steel V4A – 1.4404 (on request) **BFX-...-ES-**/**-W5**

* Kit including Metric bolts 10.9, spring rings, O-ring made of NBR (Buna-N®) **BFX-...-ES-**/**-W1-K**
* Kit including Metric bolts 10.9, spring rings, O-ring made of FKM (Viton®) **BFX-...-ES-**/**-V-W1-K**
* Kit including UNC bolts (Grade 8), spring rings, O-ring made of NBR (Buna-N®) **BFX-...-ES-**/**-U-W1-K**

Please always indicate ØB / ØA.

[1] The maximum working pressure PN (bar/PSI) applies only to the flange itself and depends on the bolts used (Grade 10.9). The actual maximum working pressure depends on the thickness and the quality of the tube used.

[3] Alternative options shown in brackets are available on request.

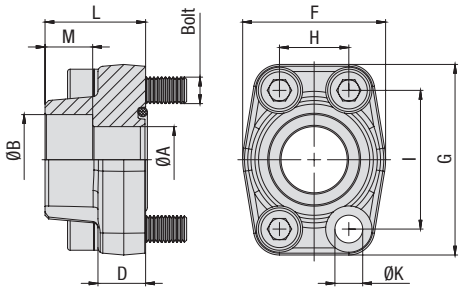

SAE Single-Part Socket-Weld Flange
Type BFX-ES ▪ 6000 PSI Series

C

6000 PSI High Pressure Series (based on ISO 6162-2:2012)

Nominal Size		PN[1] (bar/PSI)	Dimensions (mm/in)										Weight (kg/lbs) ca.	for Bolts		Ordering Codes
DN	(in)	10.9	ØA	ØB	D	F	G	H	I	L	M	ØK	per 100	Metric	UNC	
13	1/2	420	13	21,6	16,5	47	57	18,2	40,5	36	18	8,7	28,0	M8x30	5/16–18 UNC x 1-1/4	**BFX-601-ES-21.6/13-W1**
		6090	.51	.85	.65	1.85	2.24	.72	1.59	1.42	.71	.34	61.60			
13	1/2	420	13	17,5	16,5	47	57	18,2	40,5	36	18	8,7	28,8	M8x30	5/16–18 UNC x 1-1/4	**BFX-601-ES-17.5/13-W1**
		6090	.51	.69	.65	1.85	2.24	.72	1.59	1.42	.71	.34	63.36			
13	1/2	420	13	20,3	16,5	47	57	18,2	40,5	36	18	8,7	27,3	M8x30	5/16–18 UNC x 1-1/4	**BFX-601-ES-20.3/13-W1**
		6090	.51	.80	.65	1.85	2.24	.72	1.59	1.42	.71	.34	60,06			
19	3/4	420	19	27,2	19,5	54	72	23,8	50,8	36	20	10,5	51,9	M10x35	3/8–16 UNC x 1-1/2	**BFX-602-ES-27.2/19-W1**
		6090	.75	1.07	.77	2.13	2.83	.94	2.00	1.42	.79	.41	114.18			
19	3/4	420	19	25,3	19,5	54	72	23,8	50,8	36	20	10,5	53,8	M10x35	3/8–16 UNC x 1-1/2	**BFX-602-ES-25.3/19-W1**
		6090	.75	1.00	.77	2.13	2.83	.94	2.00	1.42	.79	.41	118.36			
25	1	420	25	34	24,5	68	82	27,8	57,2	44	22	13	73,8	M12x45	7/16–14 UNC x 1-3/4	**BFX-603-ES-34/25-W1** [2]
		6090	.98	1.34	.96	2.68	3.23	1.09	2.25	1.73	.87	.51	162.36			
25	1	420	25	30,3	24,5	68	82	27,8	57,2	44	22	13	81,0	M12x45	7/16–14 UNC x 1-3/4	**BFX-603-ES-30.3/25-W1** [2]
		6090	.98	1.19	.96	2.68	3.23	1.09	2.25	1.73	.87	.51	178.20			
32	1-1/4	420	32	42,8	27,5	79	95	31,8	66,6	44	22	13,5	115,7	M12x45	1/2–13 UNC x 1-3/4	**BFX-604-ES-42.8/32-W1**
		6090	1.26	1.69	1.08	3.11	3.74	1.25	2.62	1.73	.87	.53	254.54			
32	1-1/4	420	32	42,8	27,5	79	95	31,8	66,6	44	22	15	110,3	M14x45		**BFX-604-ES-42.8/32-M14-W1**
		6090	1.26	1.69	1.08	3.11	3.74	1.25	2.62	1.73	.87	.59	242.66			
32	1-1/4	420	32	38,3	27,5	79	95	31,8	66,6	44	22	13,5	118,3	M12x45	1/2–13 UNC x 1-3/4	**BFX-604-ES-38.3/32-W1**
		6090	1.26	1.51	1.08	3.11	3.74	1.25	2.62	1.73	.87	.53	260.26			
32	1-1/4	420	32	38,3	27,5	79	95	31,8	66,6	44	22	15	125,6	M14x45		**BFX-604-ES-38.3/32-M14-W1**
		6090	1.26	1.51	1.08	3.11	3.74	1.25	2.62	1.73	.87	.59	276.32			
38	1-1/2	420	38	48,6	31	88	108	36,5	79,3	51	24	17	183,5	M16x55	5/8–11 UNC x 2-1/4	**BFX-605-ES-48.6/38-W1**
		6090	1.50	1.91	1.22	3.46	4.25	1.44	3.12	2.01	.94	.67	403.70			
38	1-1/2	420	38	50,5	31	88	108	36,5	79,3	51	24	17	184,7	M16x55	5/8–11 UNC x 2-1/4	**BFX-605-ES-50.5/38-W1**
		6090	1.50	1.99	1.22	3.46	4.25	1.44	3.12	2.01	.94	.67	406.34			
51	2	420	51	61	37	118	137	44,5	96,8	65	24	21	329,2	M20x70	3/4–10 UNC x 2-3/4	**BFX-606-ES-61/51-W1**
		6090	2.01	2.40	1.46	4.65	5.39	1.75	3.81	2.56	.94	.83	724.24			
64	2-1/2	420	63	76,6	45	152	180	58,7	123,8	80	32	26	849,6	M24x80		**BFX-607-ES-76.6/63-W1**
		6090	2.48	3.02	1.77	5.98	7.09	2.31	4.87	3.15	1.26	1.02	1869.12			
76	3	420	73	90,5	55	178	208	71,4	152,4	90	30	33	1110,1	M30x100		**BFX-608-ES-90.5/73-W1**
		6090	2.87	3.56	2.17	7.01	8.19	2.81	6.00	3.54	1.18	1.30	2442.22			

Please see Page 89 for separate Bolt Sets and Sealings.

[1] The maximum working pressure PN (bar/PSI) applies only to the flange itself and depends on the bolts used (Grade 10.9). The actual maximum working pressure depends on the thickness and the quality of the tube used.

[2] For UNC threaded bolts, use hexagon head bolts only. Please note that these do not belong to our product range.

Materials / Ordering Options / Examples

* SAE Single-Part Flange (without O-ring) made of Steel S355J2 or equivalent, blank (oiled) — **BFX-...-ES-**/**-W1**
* SAE Single-Part Flange (without O-ring) made of Stainless Steel V4A – 1.4404 (on request) — **BFX-...-ES-**/**-W5**

* Kit including Metric bolts 10.9, spring rings, O-ring made of NBR (Buna-N®) — **BFX-...-ES-**/**-W1-K**
* Kit including Metric bolts 10.9, spring rings, O-ring made of FKM (Viton®) — **BFX-...-ES-**/**-V-W1-K**
* Kit including UNC bolts (Grade 8), spring rings, O-ring made of NBR (Buna-N®) — **BFX-...-ES-**/**-U-W1-K**

Please always indicate ØB / ØA.

SAE Single-Part Socket-Weld Counterflange
Type BAS-ES ▪ 3000 PSI Series

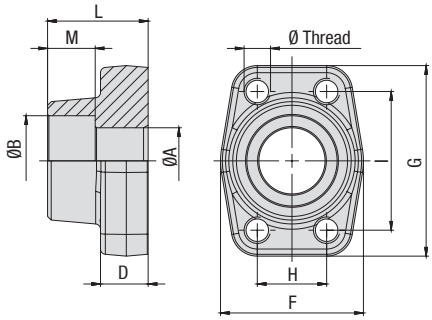

C

3000 PSI Standard Pressure Series (based on ISO 6162-1:2012)

Nominal Size DN	(in)	PN[1] (bar/PSI) 10.9	Dimensions (mm/in) ØA	ØB	D	F	G	H	I	L	M	Weight (kg/lbs) ca. per 100	Ø Thread Metric[3]	UNC	Ordering Codes
13	1/2	350	13	21,6	16	47	57	17,5	38,1	36	18	29,4	M8	5/16–18 UNC	BAS-301-ES-21.6/13-W1
		5075	.51	.85	.63	1.85	2.24	.69	1.50	1.42	.71	64.68			
13	1/2	350	13	17,5	16	47	57	17,5	38,1	36	18	30,3	M8	5/16–18 UNC	BAS-301-ES-17.5/13-W1
		5075	.51	.69	.63	1.85	2.24	.69	1.50	1.42	.71	66.66			
13	1/2	350	13	20,3	16	47	57	17,5	38,1	36	18	30,2	M8	5/16–18 UNC	BAS-301-ES-20.3/13-W1
		5075	.51	.80	.63	1.85	2.24	.69	1.50	1.42	.71	66.44			
19	3/4	350	19	27,2	18	50	67	22,3	47,6	36	18	40,1	M10	3/8–16 UNC	BAS-302-ES-27.2/19-W1
		5075	.75	1.07	.71	1.97	2.64	.88	1.87	1.42	.71	88.22			
19	3/4	350	19	25,3	18	50	67	22,3	47,6	36	18	41,9	M10	3/8–16 UNC	BAS-302-ES-25.3/19-W1
		5075	.75	1.00	.71	1.97	2.64	.88	1.87	1.42	.71	92.18			
25	1	320	25	34	18	54	72	26,2	52,4	38	18	46,4	M10	3/8–16 UNC	BAS-303-ES-34/25-W1
		4641	.98	1.34	.71	2.13	2.83	1.03	2.06	1.50	.71	102.08			
25	1	320	25	30,3	18	54	72	26,2	52,4	38	18	50,0	M10	3/8–16 UNC	BAS-303-ES-30.3/25-W1
		4641	.98	1.19	.71	2.13	2.83	1.03	2.06	1.50	.71	110.00			
32	1-1/4	280	32	42,8	21	68	82	30,2	58,7	41	20	68,0	M10 (M12)	7/16–14 UNC	BAS-304-ES-42.8/32-W1
		4061	1.26	1.69	.83	2.68	3.23	1.19	2.31	1.61	.79	149.60			
32	1-1/4	280	32	38,3	21	68	82	30,2	58,7	41	20	72,0	M10 (M12)	7/16–14 UNC	BAS-304-ES-38.3/32-W1
		4061	1.26	1.51	.83	2.68	3.23	1.19	2.31	1.61	.79	158.40			
38	1-1/2	210	38	48,6	25	79	96	35,7	69,9	44	22	107,3	M12 (M14)	1/2–13 UNC	BAS-305-ES-48.6/38-W1
		3045	1.50	1.91	.98	3.11	3.78	1.41	2.75	1.73	.87	236.06			
38	1-1/2	210	38	50,5	25	79	96	35,7	69,9	44	22	105,7	M12 (M14)	1/2–13 UNC	BAS-305-ES-50.5/38-W1
		3045	1.50	1.99	.98	3.11	3.78	1.41	2.75	1.73	.87	232.54			
51	2	210	51	61	25,5	88	102	42,9	77,8	45	24	126,0	M12 (M14)	1/2–13 UNC	BAS-306-ES-61/51-W1
		3045	2.01	2.40	1.00	3.46	4.02	1.69	3.06	1.77	.94	277.20			
64	2-1/2	175	63	76,6	26	101	115	50,8	88,9	50	28	145,0	M12 (M14)	1/2–13 UNC	BAS-307-ES-76.6/63-W1
		2538	2.48	3.02	1.02	3.98	4.53	2.00	3.50	1.97	1.10	319.00			
76	3	100	73	90,5	27,5	127	137	61,9	106,4	50	28	217,7	M16	5/8–11 UNC	BAS-308-ES-90.5/73-W1
		1450	2.87	3.56	1.08	5.00	5.39	2.44	4.19	1.97	1.10	478.94			
89	3-1/2	35	89	103	27,5	138	155	69,9	120,7	50	30	263,8	M16	5/8–11 UNC	BAS-309-ES-103/89-W1
		508	3.50	4.06	1.08	5.43	6.10	2.75	4.75	1.97	1.18	580.36			
102	4	35	99	115,5	27,5	147	163	77,8	130,2	50	30	295,1	M16	5/8–11 UNC	BAS-310-ES-115.5/99-W1
		508	3.90	4.55	1.08	5.79	6.42	3.06	5.13	1.97	1.18	649.22			
127	5	35	120	142	28	180	184	92,1	152,4	50	30	390,6	M16	5/8–11 UNC	BAS-311-ES-142/120-W1
		508	4.72	5.59	1.10	7.09	7.24	3.63	6.00	1.97	1.18	859.32			

Materials / Ordering Options / Examples

* SAE Single-Part Counterflange made of Steel S355J2 or equivalent, blank (oiled) with Metric tapped holes — **BAS-...-ES-**/**-W1**
* SAE Single-Part Counterflange made of Stainless Steel V4A – 1.4404 (on request) with Metric tapped holes — **BAS-...-ES-**/**-W5**
* SAE Single-Part Counterflange made of Steel S355J2 or equivalent, blank (oiled) with size of Metric tapped holes deviating from the standard (e.g. M14) — **BAS-...-ES-**/**-M14-W1**
* SAE Single-Part Counterflange made of Steel S355J2 or equivalent, blank (oiled) with UNC tapped holes — **BAS-...-ES-**/**-U-W1**

Please always indicate ØB / ØA.

[1] The maximum working pressure PN (bar/PSI) applies only to the flange itself and depends on the bolts used (Grade 10.9). The actual maximum working pressure depends on the thickness and the quality of the tube used.

[3] Alternative options shown in brackets are available on request.

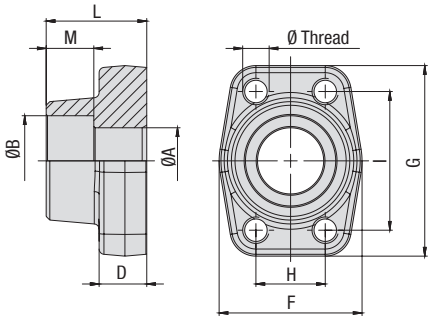

SAE Single-Part Socket-Weld Counterflange
Type BAS-ES ▪ 6000 PSI Series

6000 PSI High Pressure Series (based on ISO 6162-2:2012)

Nominal Size		PN[1] (bar/PSI)	Dimensions (mm/in)									Weight (kg/lbs) ca.	Ø Thread		Ordering Codes
DN	(in)	10.9	ØA	ØB	D	F	G	H	I	L	M	per 100	Metric	UNC	
13	1/2	420	13	21,6	16,5	47	57	18,2	40,5	36	18	28,3	M8	5/16–18 UNC	BAS-601-ES-21.6/13-W1
		6090	.51	.85	.65	1.85	2.24	.72	1.59	1.42	.71	62.26			
13	1/2	420	13	17,5	16,5	47	57	18,2	40,5	36	18	30,0	M8	5/16–18 UNC	BAS-601-ES-17.5/13-W1
		6090	.51	.69	.65	1.85	2.24	.72	1.59	1.42	.71	66.00			
13	1/2	420	13	20,3	16,5	47	57	18,2	40,5	36	18	29,0	M8	5/16–18 UNC	BAS-601-ES-20.3/13-W1
		6090	.51	.80	.65	1.85	2.24	.72	1.59	1.42	.71	63.80			
19	3/4	420	19	27,2	19,5	54	72	23,8	50,8	36	20	51,2	M10	3/8–16 UNC	BAS-602-ES-27.2/19-W1
		6090	.75	1.07	.77	2.13	2.83	.94	2.00	1.42	.79	112.64			
19	3/4	420	19	25,3	19,5	54	72	23,8	50,8	36	20	52,5	M10	3/8–16 UNC	BAS-602-ES-25.3/19-W1
		6090	.75	1.00	.77	2.13	2.83	.94	2.00	1.42	.79	115.50			
25	1	420	25	34	24,5	68	82	27,8	57,2	44	22	77,1	M12	7/16–14 UNC	BAS-603-ES-34/25-W1
		6090	.98	1.34	.96	2.68	3.23	1.09	2.25	1.73	.87	169.62			
25	1	420	25	30,3	24,5	68	82	27,8	57,2	44	22	91,1	M12	7/16–14 UNC	BAS-603-ES-30.3/25-W1
		6090	.98	1.19	.96	2.68	3.23	1.09	2.25	1.73	.87	200.42			
32	1-1/4	420	32	42,8	27,5	79	95	31,8	66,6	44	22	117,1	M12	1/2–13 UNC	BAS-604-ES-42.8/32-W1
		6090	1.26	1.69	1.08	3.11	3.74	1.25	2.62	1.73	.87	257.62			
32	1-1/4	420	32	42,8	27,5	79	95	31,8	66,6	44	22	116,7	M14		BAS-604-ES-42.8/32-M14-W1
		6090	1.26	1.69	1.08	3.11	3.74	1.25	2.62	1.73	.87	256.74			
32	1-1/4	420	32	38,3	27,5	79	95	31,8	66,6	44	22	126,2	M12	1/2–13 UNC	BAS-604-ES-38.3/32-W1
		6090	1.26	1.51	1.08	3.11	3.74	1.25	2.62	1.73	.87	277.64			
32	1-1/4	420	32	38,3	27,5	79	95	31,8	66,6	44	22	123,9	M14		BAS-604-ES-38.3/32-M14-W1
		6090	1.26	1.51	1.08	3.11	3.74	1.25	2.62	1.73	.87	272.58			
38	1-1/2	420	38	48,6	31	88	108	36,5	79,3	51	24	184,2	M16	5/8–11 UNC	BAS-605-ES-48.6/38-W1
		6090	1.50	1.91	1.22	3.46	4.25	1.44	3.12	2.01	.94	405.24			
38	1-1/2	420	38	50,5	31	88	108	36,5	79,3	51	24	191,4	M16	5/8–11 UNC	BAS-605-ES-50.5/38-W1
		6090	1.50	1.99	1.22	3.46	4.25	1.44	3.12	2.01	.94	421.08			
51	2	420	51	61	37	118	137	44,5	96,8	65	24	356,9	M20	3/4–10 UNC	BAS-606-ES-61/51-W1
		6090	2.01	2.40	1.46	4.65	5.39	1.75	3.81	2.56	.94	785.18			
64	2-1/2	420	63	76,6	45	152	180	58,7	123,8	80	32	740,2	M24		BAS-607-ES-76.6/63-W1
		6090	2.48	3.02	1.77	5.98	7.09	2.31	4.87	3.15	1.26	1628.44			
76	3	420	73	90,5	55	178	208	71,4	152,4	90	30	1304,8	M30		BAS-608-ES-90.5/73-W1
		6090	2.87	3.56	2.17	7.01	8.19	2.81	6.00	3.54	1.18	2870.56			

[1] The maximum working pressure PN (bar/PSI) applies only to the flange itself and depends on the bolts used (Grade 10.9). The actual maximum working pressure depends on the thickness and the quality of the tube used.

Materials / Ordering Options / Examples

* SAE Single-Part Counterflange made of Steel S355J2 or equivalent, blank (oiled) with Metric tapped holes — **BAS-...-ES-**/**-W1**
* SAE Single-Part Counterflange made of Stainless Steel V4A – 1.4404 (on request) with Metric tapped holes — **BAS-...-ES-**/**-W5**
* SAE Single-Part Counterflange made of Steel S355J2 or equivalent, blank (oiled) with size of Metric tapped holes deviating from the standard (e.g. M14) — **BAS-...-ES-**/**-M14-W1**
* SAE Single-Part Counterflange made of Steel S355J2 or equivalent, blank (oiled) with UNC tapped holes — **BAS-...-ES-**/**-U-W1**

Please always indicate ØB / ØA.

C

SAE Single-Part Socket-Weld Flange (Flat Style)
Type BFX-FL-ES ▪ 3000 PSI Series

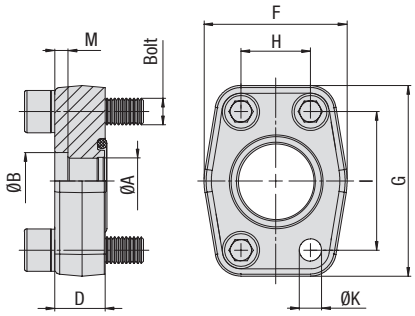

3000 PSI Standard Pressure Series (based on ISO 6162-1:2012)

Nominal Size DN	(in)	PN[1] (bar/PSI) 10.9	Dimensions (mm/in) ØA	ØB	D	F	G	H	I	M	ØK	Weight (kg/lbs) ca. per 100	for Bolts Metric	Ordering Codes
13	1/2	40	15	22,5	10	47	57	17,5	38,1	3	8,7	12,8	M8x25	BFX-FL-301-ES-22.5/15-W1
		580	.59	.89	.39	1.85	2.24	.69	1.50	.12	.34	28.16		
19	3/4	40	20	28,5	12	50	67	22,3	47,6	4	10,5	18,7	M10x30	BFX-FL-302-ES-28.5/20-W1
		580	.79	1.12	.47	1.97	2.64	.88	1.87	.16	.41	41.14		
25	1	40	29	35,5	12	54	72	26,2	52,4	4	10,5	19,7	M10x30	BFX-FL-303-ES-35.5/29-W1
		580	1.14	1.40	.47	2.13	2.83	1.03	2.06	.16	.41	43.34		
32	1-1/4	40	34	42,5	12	68	82	30,2	58,7	4	11,5	26,9	M10x30	BFX-FL-304-ES-42.5/34-W1
		580	1.34	1.67	.47	2.68	3.23	1.19	2.31	.16	.45	59.18		
38	1-1/2	40	42	49	15	79	96	35,7	69,9	4	13,5	45,7	M12x35	BFX-FL-305-ES-49/42-W1
		580	1.65	1.93	.59	3.11	3.78	1.41	2.75	.16	.53	100.54		
51	2	40	53	61	15	88	102	42,9	77,8	4	13,5	55,5	M12x35	BFX-FL-306-ES-61/53-W1
		580	2.09	2.40	.59	3.46	4.02	1.69	3.06	.16	.53	122.10		
64	2-1/2	40	64	77	15	101	115	50,8	88,9	4	13,5	68,0	M12x35	BFX-FL-307-ES-77/64-W1
		580	2.52	3.03	.59	3.98	4.53	2.00	3.50	.16	.53	149.60		
76	3	40	80	90	20	127	137	61,9	106,4	5	17	125,8	M16x50	BFX-FL-308-ES-90/80-W1
		580	3.15	3.54	.79	5.00	5.39	2.44	4.19	.20	.67	276.76		
89	3-1/2	35	93	103	20	138	155	69,9	120,7	5	17	143,5	M16x50	BFX-FL-309-ES-103/93-W1
		508	3.66	4.06	.79	5.43	6.10	2.75	4.75	.20	.67	315.70		
102	4	35	105	116	25	147	163	77,8	130,2	6	17	194,6	M16x50	BFX-FL-310-ES-116/105-W1
		508	4.13	4.57	.98	5.79	6.42	3.06	5.13	.24	.67	428.12		
125	5	35	126	141	28	170	190	92,1	152,4	8	17	287,8	M16x50	BFX-FL-311-ES-141/126-W1
		508	4.96	5.55	1.10	6.69	7.48	3.63	6.00	.31	.67	633.16		

Please see Page 89 for separate Bolt Sets and Sealings.

Materials / Ordering Options / Examples

* SAE Single-Part Flange (without O-ring) made of Steel S355J2 or equivalent, blank (oiled) — **BFX-FL-...-ES-**/**-W1**

* Kit including Metric bolts 10.9, spring rings, O-ring made of NBR (Buna-N®) — **BFX-FL-...-ES-**/**-W46-K**
* Kit including Metric bolts 10.9, spring rings, O-ring made of FKM (Viton®) — **BFX-FL-...-ES-**/**-V-W46-K**
* Kit including Metric bolts 10.9, spring rings, O-ring made of NBR (Buna-N®) — **BFX-FL-...-ES-**/**-MH-W1-K**

Please always indicate ØB / ØA.

[1] The maximum working pressure PN (bar/PSI) applies only to the flange itself. The actual maximum working pressure depends on the thickness and the quality of the tube used.

SAE Single-Part Socket-Weld Counterflange (Flat Style)
Type BAS-FL-ES ▪ 3000 PSI Series

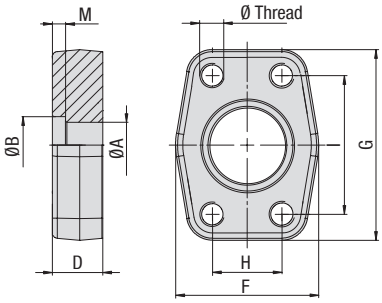

C

3000 PSI Standard Pressure Series (based on ISO 6162-1:2012)

Nominal Size		PN[1] (bar/PSI)	Dimensions (mm/in)								Weight (kg/lbs) ca.	Ø Thread	Ordering Codes
DN	(in)	10.9	ØA	ØB	D	F	G	H	I	M	per 100	Metric	
13	1/2	40	15	22,5	10	47	57	17,5	38,1	3	14,4	M8	BAS-FL-301-ES-22.5/15-W1
		580	.59	.89	.39	1.85	2.24	.69	1.50	.12	31.68		
19	3/4	40	20	28,5	12	50	67	22,3	47,6	4	20,5	M10	BAS-FL-302-ES-28.5/20-W1
		580	.79	1.12	.47	1.97	2.64	.88	1.87	.16	45.10		
25	1	40	29	35,5	12	54	72	26,2	52,4	4	21,6	M10	BAS-FL-303-ES-35.5/29-W1
		580	1.14	1.40	.47	2.13	2.83	1.03	2.06	.16	47.52		
32	1-1/4	40	34	42,5	12	68	82	30,2	58,7	4	29,5	M10	BAS-FL-304-ES-42.5/34-W1
		580	1.34	1.67	.47	2.68	3.23	1.19	2.31	.16	64.90		
38	1-1/2	40	42	49	15	79	96	35,7	69,9	4	48,6	M12	BAS-FL-305-ES-49/42-W1
		580	1.65	1.93	.59	3.11	3.78	1.41	2.75	.16	106.92		
51	2	40	53	61	15	88	102	42,9	77,8	4	59,8	M12	BAS-FL-306-ES-61/53-W1
		580	2.09	2.40	.59	3.46	4.02	1.69	3.06	.16	131.56		
64	2-1/2	40	64	77	15	101	115	50,8	88,9	4	72,4	M12	BAS-FL-307-ES-77/64-W1
		580	2.52	3.03	.59	3.98	4.53	2.00	3.50	.16	159.28		
76	3	40	80	90	20	127	137	61,9	106,4	5	132,9	M16	BAS-FL-308-ES-90/80-W1
		580	3.15	3.54	.79	5.00	5.39	2.44	4.19	.20	292.38		
89	3-1/2	35	93	103	20	138	155	69,9	120,7	5	151,6	M16	BAS-FL-309-ES-103/93-W1
		508	3.66	4.06	.79	5.43	6.10	2.75	4.75	.20	333.52		
102	4	35	105	116	25	147	163	77,8	130,2	6	203,9	M16	BAS-FL-310-ES-116/105-W1
		508	4.13	4.57	.98	5.79	6.42	3.06	5.13	.24	448.58		
125	5	35	126	141	28	170	190	92,1	152,4	8	293,0	M16	BAS-FL-311-ES-141/126-W1
		508	4.96	5.55	1.10	6.69	7.48	3.63	6.00	.31	644.60		

[1] The maximum working pressure PN (bar/PSI) applies only to the flange itself. The actual maximum working pressure depends on the thickness and the quality of the tube used.

Materials / Ordering Options / Examples

* SAE Single-Part Counterflange made of Steel S355J2 or equivalent, blank (oiled) with Metric tapped holes — **BAS-FL-...-ES-**/**-W1**

Please always indicate ØB / ØA.

C

SAE Single-Part Flange with Male Metric Thread and 24° Conical Bore (acc. to ISO 8434-1)
Type BFX-L/S ▪ 3000 PSI Series

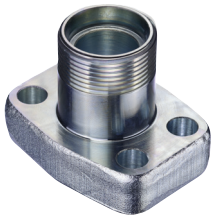

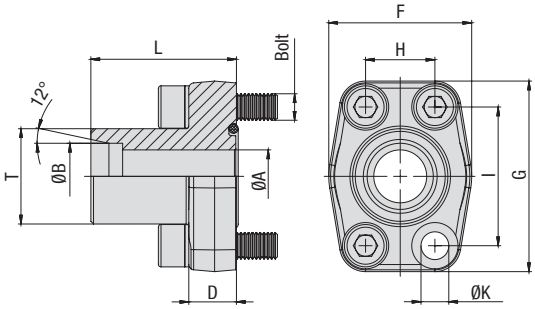

3000 PSI Standard Pressure Series (based on ISO 6162-1:2012)

Nominal Size DN	(in)	PN[1] (bar/PSI) 10.9	Dimensions (mm/in) ØA	ØB	Series	D	F	G	H	I	L	T (Metric)	ØK[3]	Weight (kg/lbs) ca. per 100	for Bolts Metric[3]	Ordering Codes
13	1/2	350	11	15	L	16	43	57	17,5	38,1	47	22x1,5	8,7	26,2	M8x30	**BFX-301-15L-W66**
		5075	.43	.59		.63	1.69	2.24	.69	1.50	1.85		.34	57.64		
19	3/4	350	16	20	S	18	50	67	22,3	47,6	52	30x2	10,5	40,7	M10x35	**BFX-302-20S-W66**
		5075	.63	.79		.71	1.97	2.64	.88	1.87	2.05		.41	89.54		
19	3/4	160	19	22	L	18	50	67	22,3	47,6	52	30x2	10,5	42,4	M10x35	**BFX-302-22L-W66**
		2320	.75	.87		.71	1.97	2.64	.88	1.87	2.05		.41	93.28		
25	1	320	16	20	S	18	54	72	26,2	52,4	55	30x2	10,5	52,5	M10x35	**BFX-303-20S-W66**
		4641	.63	.79		.71	2.13	2.83	1.03	2.06	2.17		.41	115.50		
25	1	320	20	25	S	18	54	72	26,2	52,4	55	36x2	10,5	56,1	M10x35	**BFX-303-25S-W66**
		4641	.79	.98		.71	2.13	2.83	1.03	2.06	2.17		.41	123.42		
25	1	320	23	28	L	18	54	72	26,2	52,4	55	36x2	10,5	52,5	M10x35	**BFX-303-28L-W66**
		4641	.91	1.10		.71	2.13	2.83	1.03	2.06	2.17		.41	115.50		
32	1-1/4	280	20	25	S	21	68	82	30,2	58,7	60	36x2	11,5 (13,5)	81,0	M10x40 (M12x40)	**BFX-304-25S-W66**
		4061	.79	.98		.83	2.68	3.23	1.19	2.31	2.36		.45 (.53)	178.20		
32	1-1/4	280	25	30	S	21	68	82	30,2	58,7	60	42x2	11,5 (13,5)	69,7	M10x40 (M12x40)	**BFX-304-30S-W66**
		4061	.98	1.18		.83	2.68	3.23	1.19	2.31	2.36		.45 (.53)	153.34		
32	1-1/4	280	30	35	L	21	68	82	30,2	58,7	60	45x2	11,5 (13,5)	80,1	M10x40 (M12x40)	**BFX-304-35L-W66**
		4061	1.18	1.38		.83	2.68	3.23	1.19	2.31	2.36		.45 (.53)	176.22		
38	1-1/2	210	32	38	S	25	74	96	35,7	69,9	70	52x2	13,5 (14,5)	130,5	M12x45 (M14x45)	**BFX-305-38S-W66**
		3045	1.26	1.50		.98	2.91	3.78	1.41	2.75	2.76		.53 (.57)	287.10		
38	1-1/2	210	36	42	L	25	74	96	35,7	69,9	70	52x2	13,5 (14,5)	121,2	M12x45 (M14x45)	**BFX-305-42L-W66**
		3045	1.42	1.65		.98	2.91	3.78	1.41	2.75	2.76		.53 (.57)	266.64		

Please see Page 89 for separate Bolt Sets and Sealings.

Materials / Ordering Options / Examples

* SAE Single-Part Flange (without O-ring) made of Steel S355J2 / C45 or equivalent, zinc-plated and thick-film-passivated — **BFX-...-...-W66**
* SAE Single-Part Flange (without O-ring) made of Stainless Steel V4A – 1.4404 (on request) — **BFX-...-...-W5**

* Kit including Metric bolts 10.9, spring rings, O-ring made of NBR (Buna-N®) — **BFX-...-...-W130-K**
* Kit including Metric bolts 10.9, spring rings, O-ring made of FKM (Viton®) — **BFX-...-...-V-W130-K**

Please always indicate ØB and Series.

[1] The maximum working pressure PN (bar/PSI) applies only to the flange itself and depends on the bolts used (Grade 10.9). The actual maximum working pressure depends on the thickness and the quality of the tube used.

[3] Alternative options shown in brackets are available on request.

SAE Single-Part Flange with Male Metric Thread and 24° Conical Bore (acc. to ISO 8434-1)
Type BFX-L/S ▪ 6000 PSI Series

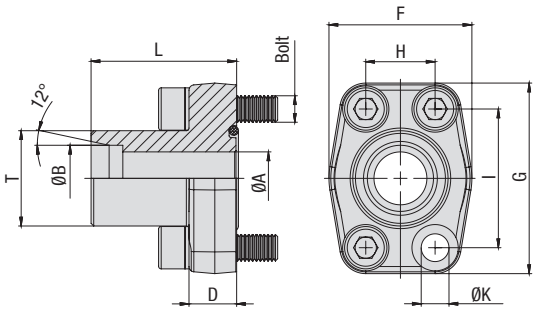

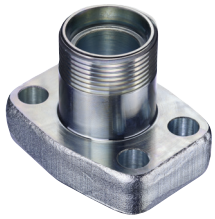

6000 PSI High Pressure Series (based on ISO 6162-2:2012)

C

Nominal Size DN	(in)	PN[1] (bar/PSI) 10.9	Dimensions (mm/in) ØA	ØB	Series	D	F	G	H	I	L	T (Metric)	ØK	Weight (kg/lbs) ca. per 100	for Bolts Metric	Ordering Codes
13	1/2	420	12	16	S	16	43	57	18,2	40,5	47	24x1,5	8,7	27,3	M8x30	BFX-601-16S-W66
		6090	.47	.63		.63	1.69	2.24	.72	1.59	1.85		.34	60.06		
19	3/4	420	12	16	S	18	54	72	23,8	50,8	52	24x1,5	10,5	53,2	M10x35	BFX-602-16S-W66
		6090	.47	.63		.71	2.13	2.83	.94	2.00	2.05		.41	117.04		
19	3/4	400	16	20	S	18	54	72	23,8	50,8	52	30x2	10,5	52,7	M10x35	BFX-602-20S-W66
		5800	.63	.79		.71	2.13	2.83	.94	2.00	2.05		.41	115.94		
19	3/4	400	18	25	S	18	54	72	23,8	50,8	52	36x2	10,5	56,8	M10x35	BFX-602-25S-W66
		5800	.71	.98		.71	2.13	2.83	.94	2.00	2.05		.41	124.96		
25	1	400	16	20	S	21	68	82	27,8	57,2	60	30x2	13	76,1	M12x40	BFX-603-20S-W66
		5800	.63	.79		.83	2.68	3.23	1.09	2.25	2.36		.51	167.42		
25	1	400	18	25	S	21	68	82	27,8	57,2	60	36x2	13	79,0	M12x40	BFX-603-25S-W66
		5800	.71	.98		.83	2.68	3.23	1.09	2.25	2.36		.51	173.80		
25	1	400	25	30	S	21	68	82	27,8	57,2	60	42x2	13	82,4	M12x40	BFX-603-30S-W66
		5800	.98	1.18		.83	2.68	3.23	1.09	2.25	2.36		.51	181.28		
32	1-1/4	400	25	30	S	24	75	95	31,8	66,6	68	42x2	13,5	118,2	M12x45	BFX-604-30S-W66
		5800	.98	1.18		.94	2.95	3.74	1.25	2.62	2.68		.53	260.04		
32	1-1/4	400	25	30	S	24	75	95	31,8	66,6	68	42x2	15	117,4	M14x45	BFX-604-30S-M14-W66
		5800	.98	1.18		.94	2.95	3.74	1.25	2.62	2.68		.59	258.28		
32	1-1/4	400	29	38	S	24	75	95	31,8	66,6	68	52x2	13,5	124,5	M12x45	BFX-604-38S-W66
		5800	1.14	1.50		.94	2.95	3.74	1.25	2.62	2.68		.53	273.90		
32	1-1/4	400	29	38	S	27	75	95	31,8	66,6	68	52x2	15	121,6	M14x45	BFX-604-38S-M14-W66
		5800	1.14	1.50		1.06	2.95	3.74	1.25	2.62	2.68		.59	267.52		
38	1-1/2	400	32	38	S	27	84	108	36,5	79,3	72	52x2	17	170,7	M16x50	BFX-605-38S-W66
		5800	1.26	1.50		1.06	3.31	4.25	1.44	3.12	2.83		.67	375.54		

Please see Page 89 for separate Bolt Sets and Sealings.

[1] The maximum working pressure PN (bar/PSI) applies only to the flange itself and depends on the bolts used (Grade 10.9). The actual maximum working pressure depends on the thickness and the quality of the tube used.

Materials / Ordering Options / Examples

* SAE Single-Part Flange (without O-ring) made of Steel S355J2 / C45 or equivalent, zinc-plated and thick-film-passivated — **BFX-...-...-W66**
* SAE Single-Part Flange (without O-ring) made of Stainless Steel V4A – 1.4404 (on request) — **BFX-...-...-W5**

* Kit including Metric bolts 10.9, spring rings, O-ring made of NBR (Buna-N®) — **BFX-...-...-W130-K**
* Kit including Metric bolts 10.9, spring rings, O-ring made of FKM (Viton®) — **BFX-...-...-V-W130-K**

Please always indicate ØB and Series.

SAE Single-Part Flange with Male BSPP Thread and 60° Conical Bore (acc. to BS 5200)
Type BFX-B ▪ 3000 PSI Series

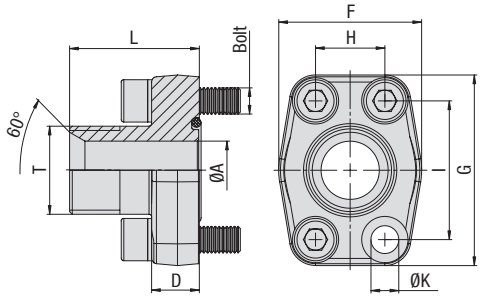

C

3000 PSI Standard Pressure Series (based on ISO 6162-1:2012)

Nominal Size DN	(in)	PN[1] (bar/PSI) 10.9	Dimensions (mm/in) ØA	D	F	G	H	I	L	T (BSPP)	ØK[3]	Weight (kg/lbs) ca. per 100	for Bolts Metric[3]	Ordering Codes
13	1/2	350	10	16	43	57	17,5	38	37	3/8 (06)	8,7	22,6	M8x30	BFX-301-B06-W66
		5075	.39	.63	1.69	2.24	.69	1.50	1.46		.34	49.72		
13	1/2	350	12	16	43	57	17,5	38	39	1/2	8,7	23,6	M8x30	BFX-301-B-W66
		5075	.47	.63	1.69	2.24	.69	1.50	1.54		.34	51.92		
13	1/2	350	13	16	43	57	17,5	38	42	3/4 (12)	8,7	25,6	M8x30	BFX-301-B12-W66
		5075	.51	.63	1.69	2.24	.69	1.50	1.65		.34	56.32		
19	3/4	350	12	18	50	67	22,3	47,6	42	1/2 (08)	10,5	37,3	M10x35	BFX-302-B08-W66
		5075	.47	.71	1.97	2.64	.88	1.87	1.65		.41	82.06		
19	3/4	350	17	18	50	67	22,3	47,6	45	3/4	10,5	39,8	M10x35	BFX-302-B-W66
		5075	.67	.71	1.97	2.64	.88	1.87	1.77		.41	87.56		
19	3/4	350	19	18	50	67	22,3	47,6	47	1 (16)	10,5	43,4	M10x35	BFX-302-B16-W66
		5075	.75	.71	1.97	2.64	.88	1.87	1.85		.41	95.48		
25	1	320	17	18	54	72	26,2	52,4	47	3/4 (12)	10,5	46,0	M10x35	BFX-303-B12-W66
		4641	.67	.71	2.13	2.83	1.03	2.06	1.85		.41	101.20		
25	1	320	22	18	54	72	26,2	52,4	49	1	10,5	47,3	M10x35	BFX-303-B-W66
		4641	.87	.71	2.13	2.83	1.03	2.06	1.93		.41	104.06		
25	1	320	25	18	54	72	26,2	52,4	49	1-1/4 (20)	10,5	53,3	M10x35	BFX-303-B20-W66
		4641	.98	.71	2.13	2.83	1.03	2.06	1.93		.41	117.26		
32	1-1/4	280	22	21	68	82	30,2	58,7	53	1 (16)	11,5 (13,5)	71,5	M10x40 (M12x40)	BFX-304-B16-W66
		4061	.87	.83	2.68	3.23	1.19	2.31	2.09		.45 (.53)	157.30		
32	1-1/4	280	27	21	68	82	30,2	58,7	55	1-1/4	11,5 (13,5)	77,0	M10x40 (M12x40)	BFX-304-B-W66
		4061	1.06	.83	2.68	3.23	1.19	2.31	2.17		.45 (.53)	169.40		
32	1-1/4	280	31	21	68	82	30,2	58,7	55	1-1/2 (24)	11,5 (13,5)	88,2	M10x40 (M12x40)	BFX-304-B24-W66
		4061	1.22	.83	2.68	3.23	1.19	2.31	2.17		.45 (.53)	194.04		
38	1-1/2	210	27	24	74	96	35,7	69,9	59	1-1/4 (20)	13,5 (14,5)	78,6	M12x45 (M14x45)	BFX-305-B20-W66
		3045	1.06	.94	2.91	3.78	1.41	2.75	2.32		.53 (.57)	172.92		
38	1-1/2	210	34	24	74	96	35,7	69,9	61	1-1/2	13,5 (14,5)	107,8	M12x45 (M14x45)	BFX-305-B-W66
		3045	1.34	.94	2.91	3.78	1.41	2.75	2.40		.53 (.57)	237.16		
38	1-1/2	210	38	24	74	96	35,7	69,9	63	2 (32)	13,5 (14,5)	123,1	M12x45 (M14x45)	BFX-305-B32-W66
		3045	1.50	.94	2.91	3.78	1.41	2.75	2.48		.53 (.57)	270.82		
51	2	210	34	25	88	102	42,9	77,8	69	1-1/2 (24)	13,5 (14,5)	154,9	M12x45 (M14x45)	BFX-306-B24-W66
		3045	1.34	.98	3.46	4.02	1.69	3.06	2.72		.53 (.57)	340.78		
51	2	210	42	25	88	102	42,9	77,8	69	2	13,5 (14,5)	155,4	M12x45 (M14x45)	BFX-306-B-W66
		3045	1.65	.98	3.46	4.02	1.69	3.06	2.72		.53 (.57)	341.88		

Please see Page 89 for separate Bolt Sets and Sealings.

Materials / Ordering Options / Examples

* SAE Single-Part Flange (without O-ring) made of Steel S355J2 / C45 or equivalent, zinc-plated and thick-film-passivated — **BFX-...-B-W66**
* SAE Single-Part Flange (without O-ring) made of Stainless Steel V4A – 1.4404 (on request) — **BFX-...-B-W5**
* Size of connection thread deviating from the standard (e.g. 1-1/4 BSPP) — **BFX-...-B20-W66**
* Kit including Metric bolts 10.9, spring rings, O-ring made of NBR (Buna-N®) — **BFX-...-B-W130-K**
* Kit including Metric bolts 10.9, spring rings, O-ring made of FKM (Viton®) — **BFX-...-B-V-W130-K**

[1] The maximum working pressure PN (bar/PSI) applies only to the flange itself and depends on the bolts used (Grade 10.9). The actual maximum working pressure depends on the thickness and the quality of the tube used.

[3] Alternative options shown in brackets are available on request.

SAE Single-Part Flange with Male BSPP Thread and 60° Conical Bore (acc. to BS 5200)
Type BFX-B ▪ 6000 PSI Series

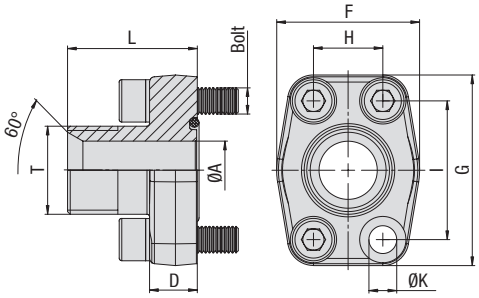

6000 PSI High Pressure Series (based on ISO 6162-2:2012)

Nominal Size		PN[1] (bar/PSI)	Dimensions (mm/in)									Weight (kg/lbs) ca.	for Bolts	Ordering Codes
DN	(in)	10.9	ØA	D	F	G	H	I	L	T (BSPP)	ØK	per 100	Metric	
13	1/2	420	10	16	43	57	18,2	40,5	38	3/8 (06)	8,7	21,7	M8x30	**BFX-601-B06-W66**
		6090	.39	.63	1.69	2.24	.72	1.59	1.50		.34	47.74		
13	1/2	420	12	16	43	57	18,2	40,5	40	1/2	8,7	23,7	M8x30	**BFX-601-B-W66**
		6090	.47	.63	1.69	2.24	.72	1.59	1.57		.34	52.14		
13	1/2	420	13	16	43	57	18,2	40,5	43	3/4 (12)	8,7	27,5	M8x30	**BFX-601-B12-W66**
		6090	.51	.63	1.69	2.24	.72	1.59	1.69		.34	60.50		
19	3/4	420	12	18	54	72	23,8	50,8	44	1/2 (08)	10,5	43,5	M10x35	**BFX-602-B08-W66**
		6090	.47	.71	2.13	2.83	.94	2.00	1.73		.41	95.70		
19	3/4	420	17	18	54	72	23,8	50,8	47	3/4	10,5	44,9	M10x35	**BFX-602-B-W66**
		6090	.67	.71	2.13	2.83	.94	2.00	1.85		.41	98.78		
19	3/4	420	19	18	54	72	23,8	50,8	49	1 (16)	10,5	50,9	M10x35	**BFX-602-B16-W66**
		6090	.75	.71	2.13	2.83	.94	2.00	1.93		.41	111.98		
25	1	420	17	21	68	82	27,8	57,2	54	3/4 (12)	13	68,7	M12x40	**BFX-603-B12-W66**
		6090	.67	.83	2.68	3.23	1.09	2.25	2.13		.51	151.14		
25	1	420	22	21	68	82	27,8	57,2	56	1	13	71,3	M12x40	**BFX-603-B-W66**
		6090	.87	.83	2.68	3.23	1.09	2.25	2.20		.51	156.86		
25	1	420	25	21	68	82	27,8	57,2	56	1-1/4 (20)	13	79,0	M12x40	**BFX-603-B20-W66**
		6090	.98	.83	2.68	3.23	1.09	2.25	2.20		.51	173.80		
32	1-1/4	420	22	24	75	95	31,8	66,6	61	1 (16)	13,5	116,7	M12x45	**BFX-604-B16-W66**
		6090	.87	.94	2.95	3.74	1.25	2.62	2.40		.53	256.74		
32	1-1/4	420	22	24	75	95	31,8	66,6	61	1 (16)	15	106,9	M14x45	**BFX-604-B16-M14-W66**
		6090	.87	.94	2.95	3.74	1.25	2.62	2.40		.59	235.18		
32	1-1/4	420	27	24	75	95	31,8	66,6	61	1-1/4	13,5	116,7	M12x45	**BFX-604-B-W66**
		6090	1.06	.94	2.95	3.74	1.25	2.62	2.40		.53	256.74		
32	1-1/4	420	27	24	75	95	31,8	66,6	61	1-1/4	15	110,3	M14x45	**BFX-604-B-M14-W66**
		6090	1.06	.94	2.95	3.74	1.25	2.62	2.40		.59	242.66		
32	1-1/4	420	31	24	75	95	31,8	66,6	63	1-1/2 (24)	13,5	106,9	M12x45	**BFX-604-B24-W66**
		6090	1.22	.94	2.95	3.74	1.25	2.62	2.48		.53	235.18		
32	1-1/4	420	31	24	75	95	31,8	66,6	63	1-1/2 (24)	15	114,5	M14x45	**BFX-604-B24-M14-W66**
		6090	1.22	.94	2.95	3.74	1.25	2.62	2.48		.59	251.90		
38	1-1/2	420	27	27	84	108	36,5	79,3	65	1-1/4	17	157,9	M16x50	**BFX-605-B20-W66**
		6090	1.06	1.06	3.31	4.25	1.44	3.12	2.56		.67	347.38		
38	1-1/2	420	32	27	84	108	36,5	79,3	67	1-1/2	17	156,5	M16x50	**BFX-605-B-W66**
		6090	1.26	1.06	3.31	4.25	1.44	3.12	2.64		.67	344.30		

Please see Page 89 for separate Bolt Sets and Sealings.

[1] The maximum working pressure PN (bar/PSI) applies only to the flange itself and depends on the bolts used (Grade 10.9). The actual maximum working pressure depends on the thickness and the quality of the tube used.

Materials / Ordering Options / Examples

- SAE Single-Part Flange (without O-ring) made of Steel S355J2 / C45 or equivalent, zinc-plated and thick-film-passivated — **BFX-...-B-W66**
- SAE Single-Part Flange (without O-ring) made of Stainless Steel V4A – 1.4404 (on request) — **BFX-...-B-W5**
- Size of connection thread deviating from the standard (e.g. 1-1/4 BSPP) — **BFX-...-B20-W66**
- Kit including Metric bolts 10.9, spring rings, O-ring made of NBR (Buna-N®) — **BFX-...-B-W130-K**
- Kit including Metric bolts 10.9, spring rings, O-ring made of FKM (Viton®) — **BFX-...-B-V-W130-K**

SAE Single-Part Flange with Male UN/UNF Thread and 37° JIC Taper (acc. to ISO 8434-2 / SAE J514)
Type BFX-J ▪ 3000 / 6000 PSI Series

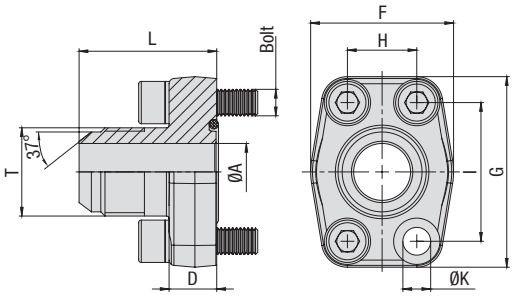

C

3000 PSI Standard Pressure Series (based on ISO 6162-1:2012)

Nominal Size DN	(in)	PN[1] (bar/PSI) 10.9	Dimensions (mm/in) ØA	D	F	G	H	I	L	T (UN/UNF)	ØK[3]	Weight (kg/lbs) ca. per 100	for Bolts Metric[3]	UNC	Ordering Codes
13	1/2	350	9,9	16	43	57	17,5	38,1	41	3/4–16 (08)	8,7	24,4	M8x30	5/16–18 UNC x 1-1/4	**BFX-301-J08-W66**
		5075	.39	.63	1.69	2.24	.69	1.50	1.61		.34	53.68			
13	1/2	350	12,3	16	43	57	17,5	38,1	41	7/8–14 (10)	8,7	24,2	M8x30	5/16–18 UNC x 1-1/4	**BFX-301-J10-W66**
		5075	.48	.63	1.69	2.24	.69	1.50	1.61		.34	53.24			
19	3/4	350	15,5	18	50	67	22,3	47,6	49	1-1/16–12 (12)	10,5	42,2	M10x35	3/8–16 UNC x 1-1/2	**BFX-302-J12-W66**
		5075	.61	.71	1.97	2.64	.88	1.87	1.93		.41	92.84			
25	1	320	21,5	18	54	72	26,2	52,4	52	1-5/16–12 (16)	10,5	48,8	M10x35	3/8–16 UNC x 1-1/2	**BFX-303-J16-W66**
		4641	.85	.71	2.13	2.83	1.03	2.06	2.05		.41	107.36			
32	1-1/4	280	21,5	21	68	82	30,2	58,7	56	1-5/16–12 (16)	11,5 (13,5)	73,3	M10x40 (M12x40)	7/16–14 UNC x 1-1/2	**BFX-304-J16-W66**
		4061	.85	.83	2.68	3.23	1.19	2.31	2.20		.45 (.53)	161.26			
32	1-1/4	280	27,5	21	68	82	30,2	58,7	58	1-5/8–12 (20)	11,5 (13,5)	77,4	M10x40 (M12x40)	7/16–14 UNC x 1-1/2	**BFX-304-J20-W66**
		4061	1.08	.83	2.68	3.23	1.19	2.31	2.28		.45 (.53)	170.28			
38	1-1/2	210	33	24	74	96	35,7	69,9	67	1-7/8–12 (24)	13,5 (14,5)	114,7	M12x45 (M14x45)	7/16–14 UNC x 1-3/4	**BFX-305-J24-W66**
		3045	1.30	.94	2.91	3.78	1.41	2.75	2.64		.53 (.57)	252.34			

6000 PSI High Pressure Series (based on ISO 6162-2:2012)

Nominal Size DN	(in)	PN[1] (bar/PSI) 10.9	Dimensions (mm/in) ØA	D	F	G	H	I	L	T (UN/UNF)	ØK	Weight (kg/lbs) ca. per 100	for Bolts Metric	UNC	Ordering Codes
13	1/2	400	9,9	16	43	57	18,2	40,5	42	3/4–16 (08)	8,7	24,0	M8x30	5/16–18 UNC x 1-1/4	**BFX-601-J08-W66**
		5800	.39	.63	1.69	2.24	.72	1.59	1.65		.34	52.80			
13	1/2	400	12,3	16	43	57	18,2	40,5	45	7/8–14 (10)	8,7	25,1	M8x30	5/16–18 UNC x 1-1/4	**BFX-601-J10-W66**
		5800	.48	.63	1.69	2.24	.72	1.59	1.77		.34	55.22			
19	3/4	400	15,5	18	54	72	23,8	50,8	51	1-1/16–12 (12)	10,5	49,2	M10x35	3/8–16 UNC x 1-1/2	**BFX-602-J12-W66**
		5800	.61	.71	2.13	2.83	.94	2.00	2.01		.41	108.24			
25	1	400	21,5	21	68	82	27,8	57,2	59	1-5/16–12 (16)	13	72,9	M12x40	1/2–13 UNC x 1-3/4	**BFX-603-J16-W66** [2]
		5800	.85	.83	2.68	3.23	1.09	2.25	2.32		.51	160.38			
32	1-1/4	400	21,5	24	75	95	31,6	66,6	64	1-5/16–12 (16)	13,5	107,0	M12x45	1/2–13 UNC x 1-3/4	**BFX-604-J16-W66**
		5800	.85	.94	2.95	3.74	1.24	2.62	2.52		.53	235.40			
32	1-1/4	400	21,5	24	75	95	31,6	66,6	64	1-5/16–12 (16)	15	106,9	M14x45		**BFX-604-J16-M14-W66**
		5800	.85	.94	2.95	3.74	1.24	2.62	2.52		.59	235.18			
32	1-1/4	400	27,5	24	75	95	31,6	66,6	66	1-5/8–12 (20)	13,5	106,9	M12x45	1/2–13 UNC x 1-3/4	**BFX-604-J20-W66**
		5800	1.08	.94	2.95	3.74	1.24	2.62	2.60		.53	235.18			
32	1-1/4	400	27,5	24	75	95	31,6	66,6	66	1-5/8–12 (20)	15	111,7	M14x45		**BFX-604-J20-M14-W66**
		5800	1.08	.94	2.95	3.74	1.24	2.62	2.60		.59	245.74			
38	1-1/2	400	33	27	84	108	36,5	79,3	73	1-7/8–12 (24)	17	160,6	M16x50	5/8–11 UNC x 2	**BFX-605-J24-W66**
		5800	1.30	1.06	3.31	4.25	1.44	3.12	2.87		.67	353.32			

Please see Page 89 for separate Bolt Sets and Sealings.

Materials / Ordering Options / Examples

* SAE Single-Part Flange (without O-ring) made of Steel S355J2 / C45 or equivalent, zinc-plated and thick-film-passivated — **BFX-...-J**-W66**
* SAE Single-Part Flange (without O-ring) made of Stainless Steel V4A – 1.4404 (on request) — **BFX-...-J**-W5**

* Kit including Metric bolts 10.9, spring rings, O-ring made of NBR (Buna-N®) — **BFX-...-J**-W130-K**
* Kit including Metric bolts 10.9, spring rings, O-ring made of FKM (Viton®) — **BFX-...-J**-V-W130-K**
* Kit including UNC bolts (Grade 8), spring rings, O-ring made of NBR (Buna-N®) — **BFX-...-J**-U-W130-K**

Please always indicate Thread Size.

[1] The maximum working pressure PN (bar/PSI) applies only to the flange itself and depends on the bolts used (Grade 10.9). The actual maximum working pressure depends on the thickness and the quality of the tube used.

[2] For UNC threaded bolts, use hexagon head bolts only. Please note that these do not belong to our product range.

[3] Alternative options shown in brackets are available on request.

SAE 90° Single-Part Flange with Female BSPP Thread
Type BFX90-G ▪ 3000 / 6000 PSI Series

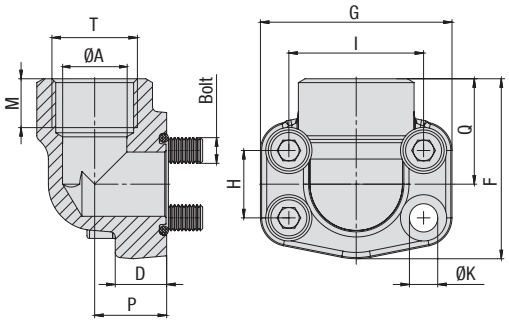

C

3000 PSI Standard Pressure Series (based on ISO 6162-1:2012)

Nominal Size DN	(in)	PN[1] (bar/PSI) 10.9	Dimensions (mm/in) ØA	D	F	G	H	I	M	P	Q	T (BSPP)	ØK[3]	Weight (kg/lbs) ca. per 100	for Bolts Metric[3]	UNC	Ordering Codes
13	1/2	350	13	16	60	54	17,5	38,1	19	20	37	1/2	8,7	31,3	M8x30	5/16–18 UNC x 1-1/4	**BFX90-301-G-W1**
		5075	.51	.63	2.36	2.13	.69	1.50	.75	.79	1.46		.34	68.86			
13	1/2	350	13	16	60	54	17,5	38,1	19	20	37	3/8 (06)	8,7	30,5	M8x30	5/16–18 UNC x 1-1/4	**BFX90-301-G06-W1**
		5075	.51	.63	2.36	2.13	.69	1.50	.75	.79	1.46		.34	67.10			
19	3/4	350	19	18	63	65	22,3	47,6	19	24	38	3/4	10,5	44,4	M10x35	3/8–16 UNC x 1-1/2	**BFX90-302-G-W1**
		5075	.75	.71	2.48	2.56	.88	1.87	.75	.94	1.50		.41	97.68			
25	1	320	25	19	70	70	26,2	52,4	20	28	43	1	10,5	60,0	M10x35	3/8–16 UNC x 1-1/2	**BFX90-303-G-W1**
		4641	.98	.75	2.76	2.76	1.03	2.06	.79	1.10	1.69		.41	132.00			
32	1-1/4	280	32	21	85	79	30,2	58,7	22	34	51	1-1/4	11,5 (13,5)	85,8	M10x40 (M12x40)	7/16–14 UNC x 1-1/2	**BFX90-304-G-W1**
		4061	1.26	.83	3.35	3.11	1.19	2.31	.87	1.34	2.01		.45 (.53)	188.76			
38	1-1/2	210	38	25	95	93	35,7	69,9	25	38	56	1-1/2	13,5 (14,5)	123,0	M12x45 (M14x45)	1/2–13 UNC x 1-3/4	**BFX90-305-G-W1**
		3045	1.50	.98	3.74	3.66	1.41	2.75	.98	1.50	2.20		.53 (.57)	270.60			
51	2	210	51	25	110	110	42,9	77,8	28	42	65	2	13,5 (14,5)	188,7	M12x45 (M14x45)	1/2–13 UNC x 1-3/4	**BFX90-306-G-W1**
		3045	2.01	.98	4.33	4.33	1.69	3.06	1.10	1.65	2.56		.53 (.57)	415.14			

6000 PSI High Pressure Series (based on ISO 6162-2:2012)

Nominal Size DN	(in)	PN[1] (bar/PSI) 10.9	Dimensions (mm/in) ØA	D	F	G	H	I	M	P	Q	T (BSPP)	ØK	Weight (kg/lbs) ca. per 100	for Bolts Metric	UNC	Ordering Codes
13	1/2	420	13	16	60	56	18,2	40,5	19	20	37	1/2	8,7	29,6	M8x30	5/16–18 UNC x 1-1/4	**BFX90-601-G-W1**
		6090	.51	.63	2.36	2.20	.72	1.59	.75	.79	1.46		.34	65.12			
13	1/2	420	13	16	60	56	18,2	40,5	19	20	37	3/8 (06)	8,7	30,2	M8x30	5/16–18 UNC x 1-1/4	**BFX90-601-G06-W1**
		6090	.51	.63	2.36	2.20	.72	1.59	.75	.79	1.46		.34	66.44			
19	3/4	420	19	19	70	72	23,8	50,8	20	28	43	3/4	10,5	70,8	M10x35	3/8–16 UNC x 1-1/2	**BFX90-602-G-W1**
		6090	.75	.75	2.76	2.83	.94	2.00	.79	1.10	1.69		.41	155.76			
25	1	420	25	21	85	79	27,8	57,2	22	34	51	1	13	109,3	M12x45	1/2–13 UNC x 1-3/4	**BFX90-603-G-W1** [2]
		6090	.98	.83	3.35	3.11	1.09	2.25	.87	1.34	2.01		.51	240.46			
32	1-1/4	420	32	25	95	93	31,6	66,6	25	38	56	1-1/4	13,5	152,4	M12x45	1/2–13 UNC x 1-3/4	**BFX90-604-G-W1**
		6090	1.26	.98	3.74	3.66	1.24	2.62	.98	1.50	2.20		.53	335.28			
32	1-1/4	420	32	25	95	93	31,6	66,6	25	38	56	1-1/4	15	144,7	M14x45		**BFX90-604-G-M14-W1**
		6090	1.26	.98	3.74	3.66	1.24	2.62	.98	1.50	2.20		.59	318.34			
38	1-1/2	420	38	25	110	110	36,5	79,3	28	42	65	1-1/2	17	245,9	M16x50	5/8–11 UNC x 2	**BFX90-605-G-W1**
		6090	1.50	.98	4.33	4.33	1.44	3.12	1.10	1.65	2.56		.67	540.98			
51	2	420	51	35	132	134	44,5	96,8	33	45	75	2	21	364,3	M20x70	3/4–10 UNC x 2-3/4	**BFX90-606-G-W1**
		6090	2.01	1.38	5.20	5.28	1.75	3.81	1.30	1.77	2.95		.83	801.46			

Please see Page 89 for separate Bolt Sets and Sealings.

[1] The maximum working pressure PN (bar/PSI) applies only to the flange itself and depends on the bolts used (Grade 10.9). The actual maximum working pressure depends on the thickness and the quality of the tube used.

[2] For UNC threaded bolts, use hexagon head bolts only. Please note that these do not belong to our product range.

[3] Alternative options shown in brackets are available on request.

Materials / Ordering Options / Examples

* SAE Single-Part Flange (without O-ring) made of Steel S355J2 or equivalent, blank (oiled) — **BFX90-...-G-W1**
* SAE Single-Part Flange (without O-ring) made of Stainless Steel V4A – 1.4404 (on request) — **BFX90-...-G-W5**

* Size of connection thread deviating from the standard (e.g. 1-1/4 BSPP) — **BFX90-...-G20-W1**

* Kit including Metric bolts 10.9, spring rings, O-ring made of NBR (Buna-N®) — **BFX90-...-G-W1-K**
* Kit including Metric bolts 10.9, spring rings, O-ring made of FKM (Viton®) — **BFX90-...-G-V-W1-K**
* Kit including UNC bolts (Grade 8), spring rings, O-ring made of NBR (Buna-N®) — **BFX90-...-G-U-W1-K**

SAE 90° Single-Part Flange with Female NPT Thread
Type BFX90-N ▪ 3000 / 6000 PSI Series

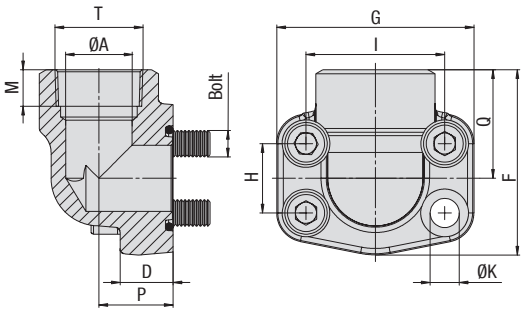

C

3000 PSI Standard Pressure Series (based on ISO 6162-1:2012)

Nominal Size		PN[1] (bar/PSI)	Dimensions (mm/in)											Weight (kg/lbs) ca.	for Bolts		Ordering Codes
DN	(in)	10.9	ØA	D	F	G	H	I	M	P	Q	T (NPT)	ØK[3]	per 100	Metric[3]	UNC	
13	1/2	350	13	16	60	54	17,5	38,1	19	20	37	1/2	8,7	31,3	M8x30	5/16–18 UNC x 1-1/4	**BFX90-301-N-W1**
		5075	.51	.63	2.36	2.13	.69	1.50	.75	.79	1.46		.34	68.86			
13	1/2	350	13	16	60	54	17,5	38,1	19	20	37	3/8 (06)	8,7	31,3	M8x30	5/16–18 UNC x 1-1/4	**BFX90-301-N06-W1**
		5075	.51	.63	2.36	2.13	.69	1.50	.75	.79	1.46		.34	68.86			
19	3/4	350	19	18	63	65	22,3	47,6	19	24	38	3/4	10,5	47,1	M10x35	3/8–16 UNC x 1-1/2	**BFX90-302-N-W1**
		5075	.75	.71	2.48	2.56	.88	1.87	.75	.94	1.50		.41	103.62			
25	1	320	25	19	70	70	26,2	52,4	20	28	43	1	10,5	58,2	M10x35	3/8–16 UNC x 1-1/2	**BFX90-303-N-W1**
		4641	.98	.75	2.76	2.76	1.03	2.06	.79	1.10	1.69		.41	128.04			
32	1-1/4	280	32	21	85	79	30,2	58,7	22	34	51	1-1/4	11,5 (13,5)	87,9	M10x40 (M12x40)	7/16–14 UNC x 1-1/2	**BFX90-304-N-W1**
		4061	1.26	.83	3.35	3.11	1.19	2.31	.87	1.34	2.01		.45 (.53)	193.38			
38	1-1/2	210	38	25	95	93	35,7	69,9	25	38	56	1-1/2	13,5 (14,5)	126,2	M12x45 (M14x45)	1/2–13 UNC x 1-3/4	**BFX90-305-N-W1**
		3045	1.50	.98	3.74	3.66	1.41	2.75	.98	1.50	2.20		.53 (.57)	277.64			
51	2	210	51	25	110	110	42,9	77,8	28	42	65	2	13,5 (14,5)	189,0	M12x45 (M14x45)	1/2–13 UNC x 1-3/4	**BFX90-306-N-W1**
		3045	2.01	.98	4.33	4.33	1.69	3.06	1.10	1.65	2.56		.53 (.57)	415.80			

Please see Page 89 for separate Bolt Sets and Sealings.

6000 PSI High Pressure Series (based on ISO 6162-2:2012)

Nominal Size		PN[1] (bar/PSI)	Dimensions (mm/in)											Weight (kg/lbs) ca.	for Bolts		Ordering Codes
DN	(in)	10.9	ØA	D	F	G	H	I	M	P	Q	T (NPT)	ØK	per 100	Metric	UNC	
13	1/2	420	13	16	60	56	18,2	40,5	19	20	37	1/2	8,7	30,0	M8x30	5/16–18 UNC x 1-1/4	**BFX90-601-N-W1**
		6090	.51	.63	2.36	2.20	.72	1.59	.75	.79	1.46		.34	66.00			
13	1/2	420	13	16	60	56	18,2	40,5	19	20	37	3/8 (06)	8,7	30,0	M8x30	5/16–18 UNC x 1-1/4	**BFX90-601-N06-W1**
		6090	.51	.63	2.36	2.20	.72	1.59	.75	.79	1.46		.34	66.00			
19	3/4	420	19	19	70	72	23,8	50,8	20	28	43	3/4	10,5	66,6	M10x35	3/8–16 UNC x 1-1/2	**BFX90-602-N-W1**
		6090	.75	.75	2.76	2.83	.94	2.00	.79	1.10	1.69		.41	146.52			
25	1	420	25	21	85	79	27,8	57,2	22	34	51	1	13	109,0	M12x45	1/2–13 UNC x 1-3/4	**BFX90-603-N-W1** [2]
		6090	.98	.83	3.35	3.11	1.09	2.25	.87	1.34	2.01		.51	239.80			
32	1-1/4	420	32	25	95	93	31,6	66,6	25	38	56	1-1/4	13,5	145,0	M12x45	1/2–13 UNC x 1-3/4	**BFX90-604-N-W1**
		6090	1.26	.98	3.74	3.66	1.24	2.62	.98	1.50	2.20		.53	319.00			
32	1-1/4	420	32	25	95	93	31,6	66,6	25	38	56	1-1/4	15	150,4	M14x45		**BFX90-604-N-M14-W1**
		6090	1.26	.98	3.74	3.66	1.24	2.62	.98	1.50	2.20		.59	330.88			
38	1-1/2	420	38	25	110	110	36,5	79,3	28	42	65	1-1/2	17	246,0	M16x50	5/8–11 UNC x 2	**BFX90-605-N-W1**
		6090	1.50	.98	4.33	4.33	1.44	3.12	1.10	1.65	2.56		.67	541.20			
51	2	420	51	35	132	134	44,5	96,8	33	45	75	2	21	364,0	M20x70	3/4–10 UNC x 2-3/4	**BFX90-606-N-W1**
		6090	2.01	1.38	5.20	5.28	1.75	3.81	1.30	1.77	2.95		.83	800.80			

Please see Page 89 for separate Bolt Sets and Sealings.

Materials / Ordering Options / Examples

* SAE Single-Part Flange (without O-ring) made of Steel S355J2 or equivalent, blank (oiled) — **BFX90-...-N-W1**
* SAE Single-Part Flange (without O-ring) made of Stainless Steel V4A – 1.4404 (on request) — **BFX90-...-N-W5**

* Size of connection thread deviating from the standard (e.g. 3/8 NPT) — **BFX90-...-N06-W1**

* Kit including Metric bolts 10.9, spring rings, O-ring made of NBR (Buna-N®) — **BFX90-...-N-W1-K**
* Kit including Metric bolts 10.9, spring rings, O-ring made of FKM (Viton®) — **BFX90-...-N-V-W1-K**
* Kit including UNC bolts (Grade 8), spring rings, O-ring made of NBR (Buna-N®) — **BFX90-...-N-U-W1-K**

[1] The maximum working pressure PN (bar/PSI) applies only to the flange itself and depends on the bolts used (Grade 10.9). The actual maximum working pressure depends on the thickness and the quality of the tube used.

[2] For UNC threaded bolts, use hexagon head bolts only. Please note that these do not belong to our product range.

[3] Alternative options shown in brackets are available on request.

SAE 90° Single-Part Butt-Weld Flange for High Pressure Tubes
Type BFX90-STC ▪ 3000 / 6000 PSI Series

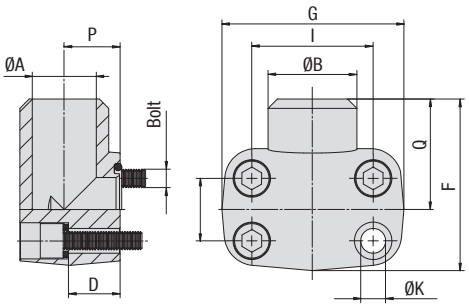

Version A

C

3000 PSI Standard Pressure Series (based on ISO 6162-1:2012)

Nominal Size DN	(in)	PN[1] (bar/PSI) 10.9	Dimensions (mm/in) ØA	ØB	D	F	G	H	I	P	Q	ØK	Weight (kg/lbs) ca. per 100	for Bolts Metric	Version	Ordering Codes
19	3/4	350	19	27	21	63	70	22,3	47,6	23	41	11	73,5	M10x40	A	BFX90-302-STC-27/19-W1 [2]
		5075	.75	1.06	.83	2.48	2.76	.88	1.87	.91	1.61	.43	161.70			
25	1	320	23	34,5	24	72	75	26,2	52,4	25	48	11	85,0	M10x45	A	BFX90-303-STC-34.5/23-W1 [3]
		4641	.91	1.36	.94	2.83	2.95	1.03	2.06	.98	1.89	.43	187.00			
32	1-1/4	280	31	43	25	82	86	30,2	58,7	27	54	11,5	80,0	M10x45	A	BFX90-304-STC-43/31-W1
		4061	1.22	1.69	.98	3.23	3.39	1.19	2.31	1.06	2.13	.45	176.00			
38	1-1/2	210	35	50	29	92	97	35,7	69,9	31,5	57	14	189,4	M12x50	A	BFX90-305-STC-50/35-W1
		3045	1.38	1.97	1.14	3.62	3.82	1.41	2.75	1.24	2.24	.55	416.68			
51	2	210	48	65	50	99	100	42,9	77,8	37,5	63	14	214,8	M12x70	A	BFX90-306-STC-65/48-W1
		3045	1.89	2.56	1.97	3.90	3.94	1.69	3.06	1.48	2.48	.55	472.56			

Please see Page 89 for separate Bolt Sets and Sealings.

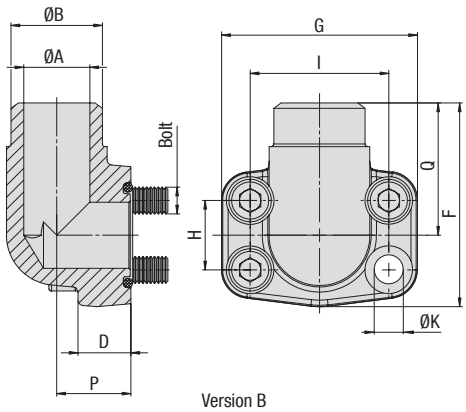

Version B

6000 PSI High Pressure Series (based on ISO 6162-2:2012)

Nominal Size DN	(in)	PN[1] (bar/PSI) 10.9	Dimensions (mm/in) ØA	ØB	D	F	G	H	I	P	Q	ØK	Weight (kg/lbs) ca. per 100	for Bolts Metric	Version	Ordering Codes
19	3/4	420	19	28	19	70	71	23,8	50,8	22	40	11	50,1	M10x35	B	BFX90-602-STC-28/19-W1
		6090	.75	1.10	.75	2.76	2.80	.94	2.00	.87	1.57	.43	110.22			
25	1	420	25	34	24	82	81	27,8	57,2	27	47	13	77,2	M12x45	B	BFX90-603-STC-34/25-W1
		6090	.98	1.34	.94	3.23	3.19	1.09	2.25	1.06	1.85	.51	169.84			
32	1-1/4	420	32	42	27	95	95	31,8	66,6	32	56	15	119,6	M14x50	B	BFX90-604-STC-42/32-M14-W1
		6090	1.26	1.65	1.06	3.74	3.74	1.25	2.62	1.26	2.20	.59	263.12			
38	1-1/2	420	38	48	30	115	113	36,5	79,3	40	68	17	193,7	M16x50	B	BFX90-605-STC-48/38-W1
		6090	1.50	1.89	1.18	4.53	4.45	1.44	3.12	1.57	2.68	.67	426.14			

Please see Page 89 for separate Bolt Sets and Sealings.

[1] The maximum working pressure PN (bar/PSI) applies only to the flange itself and depends on the bolts used (Grade 10.9). The actual maximum working pressure depends on the thickness and the quality of the tube used.

[2] Deviant O-ring size: 25,07 x 2,62 mm / .99 x .10 in

[3] Deviant O-ring size: 28,17 x 3,53 mm / 1.11 x .14 in

Materials / Ordering Options / Examples

* SAE Single-Part Flange (without O-ring) made of Steel S355J2 or equivalent, blank (oiled) — **BFX90-...-STC-**/**-W1**

* Kit including Metric bolts 10.9, spring rings, O-ring made of NBR (Buna-N®) — **BFX90-...-STC-**/**-W1-K**
* Kit including Metric bolts 10.9, spring rings, O-ring made of FKM (Viton®) — **BFX90-...-STC-V-**/**-W1-K**

Please always indicate ØB / ØA.

SAE 90° Single-Part Butt-Weld Flange for Metric Tubes
Type BFX90-SRE ▪ 3000 PSI Series

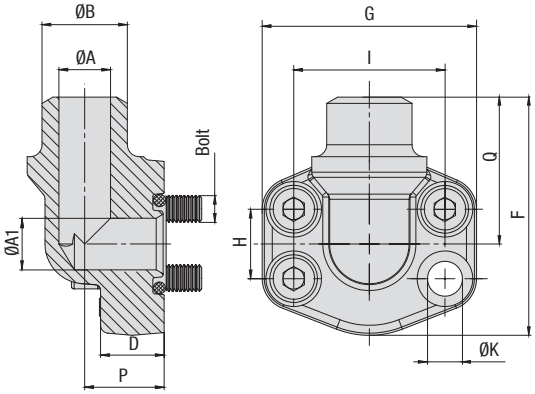

C

3000 PSI Standard Pressure Series (based on ISO 6162-1:2012)

Nominal Size DN	(in)	PN[1] (bar/PSI) 10.9	Dimensions (mm/in) ØA	ØA1	ØB	D	F	G	H	I	P	Q	ØK[3]	Weight (kg/lbs) ca. per 100	for Bolts Metric[3]	UNC	Ordering Codes
13	1/2	350	14	13	20	16	60	54	17,5	38,1	20	37	8,7	26,9	M8x30	5/16–18 UNC x 1-1/4	**BFX90-301-SRE-20/14-W1**
		5075	.55	.51	.79	.63	2.36	2.13	.69	1.50	.79	1.46	.34	59.18			
13	1/2	350	18	13	22	16	60	54	17,5	38,1	20	37	8,7	27,5	M8x30	5/16–18 UNC x 1-1/4	**BFX90-301-SRE-22/18-W1**
		5075	.71	.51	.87	.63	2.36	2.13	.69	1.50	.79	1.46	.34	60.50			
13	1/2	350	19	13	25	16	60	54	17,5	38,1	20	37	8,7	28,0	M8x30	5/16–18 UNC x 1-1/4	**BFX90-301-SRE-25/19-W1**
		5075	.75	.51	.98	.63	2.36	2.13	.69	1.50	.79	1.46	.34	61.60			
19	3/4	350	19	19	25	18	63	65	22,3	47,6	24	38	10,5	40,6	M10x35	3/8–16 UNC x 1-1/2	**BFX90-302-SRE-25/19-W1**
		5075	.75	.75	.98	.71	2.48	2.56	.88	1.87	.94	1.50	.41	89.32			
19	3/4	350	22	19	28	18	63	65	22,3	47,6	24	38	10,5	39,0	M10x35	3/8–16 UNC x 1-1/2	**BFX90-302-SRE-28/22-W1**
		5075	.87	.75	1.10	.71	2.48	2.56	.88	1.87	.94	1.50	.41	85.80			
19	3/4	350	22	19	30	18	63	65	22,3	47,6	24	38	10,5	40,0	M10x35	3/8–16 UNC x 1-1/2	**BFX90-302-SRE-30/22-W1**
		5075	.87	.75	1.18	.71	2.48	2.56	.88	1.87	.94	1.50	.41	88.00			
19	3/4	350	27	19	35	18	63	65	22,3	47,6	24	38	10,5	42,0	M10x35	3/8–16 UNC x 1-1/2	**BFX90-302-SRE-35/27-W1**
		5075	1.06	.75	1.38	.71	2.48	2.56	.88	1.87	.94	1.50	.41	92.40			
25	1	320	22	25	30	19	70	70	26,2	52,4	28	43	10,5	56,5	M10x35	3/8–16 UNC x 1-1/2	**BFX90-303-SRE-30/22-W1**
		4641	.87	.98	1.18	.75	2.76	2.76	1.03	2.06	1.10	1.69	.41	124.30			
25	1	320	27	25	35	19	70	70	26,2	52,4	28	43	10,5	53,3	M10x35	3/8–16 UNC x 1-1/2	**BFX90-303-SRE-35/27-W1**
		4641	1.06	.98	1.38	.75	2.76	2.76	1.03	2.06	1.10	1.69	.41	117.26			
25	1	320	30	25	38	19	70	70	26,2	52,4	28	43	10,5	55,9	M10x35	3/8–16 UNC x 1-1/2	**BFX90-303-SRE-38/30-W1**
		4641	1.18	.98	1.50	.75	2.76	2.76	1.03	2.06	1.10	1.69	.41	122.98			
25	1	320	36	25	42	19	70	70	26,2	52,4	28	43	10,5	51,8	M10x35	3/8–16 UNC x 1-1/2	**BFX90-303-SRE-42/36-W1**
		4641	1.42	.98	1.65	.75	2.76	2.76	1.03	2.06	1.10	1.69	.41	113.96			
32	1-1/4	280	30	32	38	21	85	79	30,2	58,7	34	51	11,5 (13,5)	79,2	M10x40 (M12x40)	7/16–14 UNC x 1-1/2	**BFX90-304-SRE-38/30-W1**
		4061	1.18	1.26	1.50	.83	3.35	3.11	1.19	2.31	1.34	2.01	.45 (.53)	174.24			
32	1-1/4	280	36	32	42	21	85	79	30,2	58,7	34	51	11,5 (13,5)	78,3	M10x40 (M12x40)	7/16–14 UNC x 1-1/2	**BFX90-304-SRE-42/36-W1**
		4061	1.42	1.26	1.65	.83	3.35	3.11	1.19	2.31	1.34	2.01	.45 (.53)	172.26			
32	1-1/4	280	39	32	49	21	85	79	30,2	58,7	34	51	11,5 (13,5)	82,5	M10x40 (M12x40)	7/16–14 UNC x 1-1/2	**BFX90-304-SRE-49/39-W1**
		4061	1.54	1.26	1.93	.83	3.35	3.11	1.19	2.31	1.34	2.01	.45 (.53)	181.50			
38	1-1/2	210	30	38	38	25	95	93	35,7	69,9	38	56	13,5 (14,5)	135,0	M12x45 (M14x45)	1/2–13 UNC x 1-3/4	**BFX90-305-SRE-38/30-W1**
		3045	1.18	1.50	1.50	.98	3.74	3.66	1.41	2.75	1.50	2.20	.53 (.57)	297.00			
38	1-1/2	210	36	38	42	25	95	93	35,7	69,9	38	56	13,5 (14,5)	124,1	M12x45 (M14x45)	1/2–13 UNC x 1-3/4	**BFX90-305-SRE-42/36-W1**
		3045	1.42	1.50	1.65	.98	3.74	3.66	1.41	2.75	1.50	2.20	.53 (.57)	273.02			
38	1-1/2	210	39	38	49	25	95	93	35,7	69,9	38	56	13,5 (14,5)	134,4	M12x45 (M14x45)	1/2–13 UNC x 1-3/4	**BFX90-305-SRE-49/39-W1**
		3045	1.54	1.50	1.93	.98	3.74	3.66	1.41	2.75	1.50	2.20	.53 (.57)	295.68			
51	2	210	49	51	61	25	110	110	42,9	77,8	42	65	13,5 (14,5)	199,7	M12x45 (M14x45)	1/2–13 UNC x 1-3/4	**BFX90-306-SRE-61/49-W1**
		3045	1.93	2.01	2.40	.98	4.33	4.33	1.69	3.06	1.65	2.56	.53 (.57)	439.34			

Please see Page 89 for separate Bolt Sets and Sealings.

Materials / Ordering Options / Examples

* SAE Single-Part Flange (without O-ring) made of Steel S355J2 or equivalent, blank (oiled) **BFX90-...-SRE-**/**-W1**
* SAE Single-Part Flange (without O-ring) made of Stainless Steel V4A – 1.4404 (on request) **BFX90-...-SRE-**/**-W5**

* Kit including Metric bolts 10.9, spring rings, O-ring made of NBR (Buna-N®) **BFX90-...-SRE-**/**-W1-K**
* Kit including Metric bolts 10.9, spring rings, O-ring made of FKM (Viton®) **BFX90-...-SRE-**/**-V-W1-K**
* Kit including UNC bolts (Grade 8), spring rings, O-ring made of NBR (Buna-N®) **BFX90-...-SRE-**/**-U-W1-K**

Please always indicate ØB / ØA.

[1] The maximum working pressure PN (bar/PSI) applies only to the flange itself and depends on the bolts used (Grade 10.9). The actual maximum working pressure depends on the thickness and the quality of the tube used.

[3] Alternative options shown in brackets are available on request.

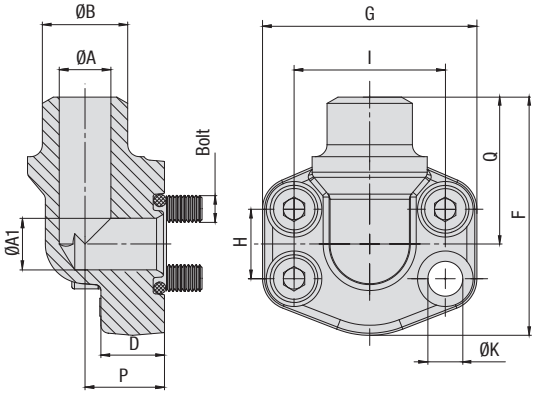

SAE 90° Single-Part Butt-Weld Flange for Metric Tubes
Type BFX90-SRE ▪ 6000 PSI Series

6000 PSI High Pressure Series (based on ISO 6162-2:2012)

Nominal Size DN	(in)	PN[1] (bar/PSI) 10.9	Dimensions (mm/in) ØA	ØA1	ØB	D	F	G	H	I	P	Q	ØK	Weight (kg/lbs) ca. per 100	for Bolts Metric	UNC	Ordering Codes
13	1/2	420	14	13	20	16	60	54	18,2	40,5	20	37	8,7	26,6	M8x30	5/16–18 UNC x 1-1/4	**BFX90-601-SRE-20/14-W1**
		6090	.55	.51	.79	.63	2.36	2.13	.72	1.59	.79	1.46	.34	58.52			
13	1/2	420	17	13	25	16	60	54	18,2	40,5	20	37	8,7	28,3	M8x30	5/16–18 UNC x 1-1/4	**BFX90-601-SRE-25/17-W1**
		6090	.67	.51	.98	.63	2.36	2.13	.72	1.59	.79	1.46	.34	62.26			
19	3/4	420	17	19	25	19	70	72	23,8	50,8	28	43	10,5	62,2	M10x35	3/8–16 UNC x 1-1/2	**BFX90-602-SRE-25/17-W1**
		6090	.67	.75	.98	.75	2.76	2.83	.94	2.00	1.10	1.69	.41	136.84			
19	3/4	420	22	19	30	19	70	72	23,8	50,8	28	43	10,5	60,6	M10x35	3/8–16 UNC x 1-1/2	**BFX90-602-SRE-30/22-W1**
		6090	.87	.75	1.18	.75	2.76	2.83	.94	2.00	1.10	1.69	.41	133.32			
25	1	420	22	25	30	21	85	79	27,8	57,2	34	51	13,5	94,4	M12x45	7/16–14 UNC x 1-3/4	**BFX90-603-SRE-30/22-W1** [2]
		6090	.87	.98	1.18	.83	3.35	3.11	1.09	2.25	1.34	2.01	.53	207.68			
25	1	420	28	25	38	21	85	79	27,8	57,2	34	51	13,5	90,9	M12x45	7/16–14 UNC x 1-3/4	**BFX90-603-SRE-38/28-W1** [2]
		6090	1.10	.98	1.50	.83	3.35	3.11	1.09	2.25	1.34	2.01	.53	199.98			
32	1-1/4	420	28	32	38	25	95	93	31,8	66,6	38	56	13,5	139,0	M12x45	1/2–13 UNC x 1-3/4	**BFX90-604-SRE-38/28-W1**
		6090	1.10	1.26	1.50	.98	3.74	3.66	1.25	2.62	1.50	2.20	.53	305.80			
32	1-1/4	420	28	32	38	25	95	93	31,8	66,6	38	56	15	138,6	M14x45		**BFX90-604-SRE-38/28-M14-W1**
		6090	1.10	1.26	1.50	.98	3.74	3.66	1.25	2.62	1.50	2.20	.59	304.92			
32	1-1/4	420	32	32	49	25	95	93	31,8	66,6	38	56	13,5	145,0	M12x45	1/2–13 UNC x 1-3/4	**BFX90-604-SRE-49/32 -W1**
		6090	1.26	1.26	1.93	.98	3.74	3.66	1.25	2.62	1.50	2.20	.53	319.00			
32	1-1/4	420	32	32	49	25	95	93	31,8	66,6	38	56	15	146,0	M14x45		**BFX90-604-SRE-49/32-M14-W1**
		6090	1.26	1.26	1.93	.98	3.74	3.66	1.25	2.62	1.50	2.20	.59	321.20			
38	1-1/2	420	28	38	38	25	110	110	36,5	79,3	42	65	17	240,3	M16x50	5/8–11 UNC x 2	**BFX90-605-SRE-38/28-W1**
		6090	1.10	1.50	1.50	.98	4.33	4.33	1.44	3.12	1.65	2.56	.67	528.66			
38	1-1/2	420	32	38	49	25	110	110	36,5	79,3	42	65	17	241,1	M16x50	5/8–11 UNC x 2	**BFX90-605-SRE-49/32-W1**
		6090	1.26	1.50	1.93	.98	4.33	4.33	1.44	3.12	1.65	2.56	.67	530.42			
38	1-1/2	420	40	38	61	25	110	110	36,5	79,3	42	65	17	236,2	M16x50	5/8–11 UNC x 2	**BFX90-605-SRE-61/40-W1**
		6090	1.57	1.50	2.40	.98	4.33	4.33	1.44	3.12	1.65	2.56	.67	519.64			
51	2	420	40	51	61	35	132	134	44,5	96,8	45	75	21	374,6	M20x70	3/4–10 UNC x 2-3/4	**BFX90-606-SRE-61/40-W1**
		6090	1.57	2.01	2.40	1.38	5.20	5.28	1.75	3.81	1.77	2.95	.83	824.12			
51	2	420	50	51	76	35	132	134	44,5	96,8	45	75	21	387,4	M20x70	3/4–10 UNC x 2-3/4	**BFX90-606-SRE-76/50-W1**
		6090	1.97	2.01	2.99	1.38	5.20	5.28	1.75	3.81	1.77	2.95	.83	852.28			

Please see Page 89 for separate Bolt Sets and Sealings.

[1] The maximum working pressure PN (bar/PSI) applies only to the flange itself and depends on the bolts used (Grade 10.9). The actual maximum working pressure depends on the thickness and the quality of the tube used.

[2] For UNC threaded bolts, use hexagon head bolts only. Please note that these do not belong to our product range.

Materials / Ordering Options / Examples

* SAE Single-Part Flange (without O-ring) made of Steel S355J2 or equivalent, blank (oiled) **BFX90-...-SRE-**/**-W1**
* SAE Single-Part Flange (without O-ring) made of Stainless Steel V4A – 1.4404 (on request) **BFX90-...-SRE-**/**-W5**

* Kit including Metric bolts 10.9, spring rings, O-ring made of NBR (Buna-N®) **BFX90-...-SRE-**/**-W1-K**
* Kit including Metric bolts 10.9, spring rings, O-ring made of FKM (Viton®) **BFX90-...-SRE-**/**-V-W1-K**
* Kit including UNC bolts (Grade 8), spring rings, O-ring made of NBR (Buna-N®) **BFX90-...-SRE-**/**-U-W1-K**

Please always indicate ØB / ØA.

SAE 90° Single-Part Socket-Weld Flange
Type BFX90-ES ▪ 3000 PSI Series

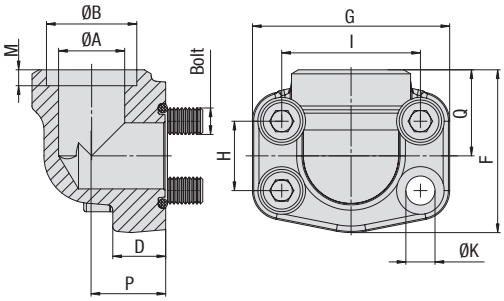

C

3000 PSI Standard Pressure Series (based on ISO 6162-1:2012)

Nominal Size DN	(in)	PN[1] (bar/PSI) 10.9	Dimensions (mm/in) ØA	ØB	D	F	G	H	I	M	P	Q	ØK[3]	Weight (kg/lbs) ca. per 100	for Bolts Metric[3]	UNC	Ordering Codes
13	1/2	350	13	21,6	16	60	54	17,5	38,1	10	20	37	8,7	30,5	M8x30	5/16–18 UNC x 1-1/4	**BFX90-301-ES-21.6/13-W1**
		5075	.51	.85	.63	2.36	2.13	.69	1.50	.39	.79	1.46	.34	67.10			
13	1/2	350	13	17,5	16	60	54	17,5	38,1	10	20	37	8,7	31,1	M8x30	5/16–18 UNC x 1-1/4	**BFX90-301-ES-17.5/13-W1**
		5075	.51	.69	.63	2.36	2.13	.69	1.50	.39	.79	1.46	.34	68.42			
19	3/4	350	19	27,2	18	63	65	22,3	47,6	10	24	38	10,5	45,3	M10x35	3/8–16 UNC x 1-1/2	**BFX90-302-ES-27.2/19-W1**
		5075	.75	1.07	.71	2.48	2.56	.88	1.87	.39	.94	1.50	.41	99.66			
25	1	320	25	34	19	70	70	26,2	52,4	12	28	43	10,5	57,9	M10x35	3/8–16 UNC x 1-1/2	**BFX90-303-ES-34/25-W1**
		4641	.98	1.34	.75	2.76	2.76	1.03	2.06	.47	1.10	1.69	.41	127.38			
32	1-1/4	280	32	42,8	21	85	79	30,2	58,7	14	34	51	11,5 (13,5)	91,2	M10x40 (M12x40)	7/16–14 UNC x 1-1/2	**BFX90-304-ES-42.8/32-W1**
		4061	1.26	1.69	.83	3.35	3.11	1.19	2.31	.55	1.34	2.01	.45 (.53)	200.64			
38	1-1/2	210	38	48,6	25	95	93	35,7	69,9	16	38	56	13,5 (14,5)	129,2	M12x45 (M14x45)	1/2–13 UNC x 1-3/4	**BFX90-305-ES-48.6/38-W1**
		3045	1.50	1.91	.98	3.74	3.66	1.41	2.75	.63	1.50	2.20	.53 (.57)	284.24			
51	2	210	51	61	25	110	110	42,9	77,8	18	42	65	13,5 (14,5)	193,9	M12x45 (M14x45)	1/2–13 UNC x 1-3/4	**BFX90-306-ES-61/51-W1**
		3045	2.01	2.40	.98	4.33	4.33	1.69	3.06	.71	1.65	2.56	.53 (.57)	426.58			

Please see Page 89 for separate Bolt Sets and Sealings.

Materials / Ordering Options / Examples

* SAE Single-Part Flange (without O-ring) made of Steel S355J2 or equivalent, blank (oiled) **BFX90-...-ES-**/**-W1**
* SAE Single-Part Flange (without O-ring) made of Stainless Steel V4A – 1.4404 (on request) **BFX90-...-ES-**/**-W5**

* Kit including Metric bolts 10.9, spring rings, O-ring made of NBR (Buna-N®) **BFX90-...-ES-**/**-W1-K**
* Kit including Metric bolts 10.9, spring rings, O-ring made of FKM (Viton®) **BFX90-...-ES-**/**-V-W1-K**
* Kit including UNC bolts (Grade 8), spring rings, O-ring made of NBR (Buna-N®) **BFX90-...-ES-**/**-U-W1-K**

Please always indicate ØB / ØA.

[1] The maximum working pressure PN (bar/PSI) applies only to the flange itself and depends on the bolts used (Grade 10.9). The actual maximum working pressure depends on the thickness and the quality of the tube used.

[3] Alternative options shown in brackets are available on request.

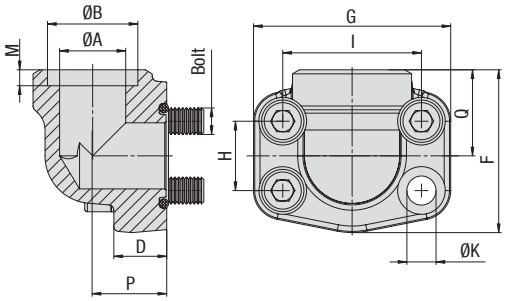

SAE 90° Single-Part Socket-Weld Flange
Type BFX90-ES ▪ 6000 PSI Series

C

6000 PSI High Pressure Series (based on ISO 6162-2:2012)

Nominal Size DN	(in)	PN[1] (bar/PSI) 10.9	Dimensions (mm/in) ØA	ØB	D	F	G	H	I	M	P	Q	ØK	Weight (kg/lbs) ca. per 100	for Bolts Metric	UNC	Ordering Codes
13	1/2	420	13	21,6	16	60	54	18,2	40,5	10	20	37	8,7	30,1	M8x30	5/16–18 UNC x 1-1/4	**BFX90-601-ES-21.6/13-W1**
		6090	.51	.85	.63	2.36	2.13	.72	1.59	.39	.79	1.46	.34	66.22			
13	1/2	420	13	17,5	16	60	54	18,2	40,5	10	20	37	8,7	31,3	M8x30	5/16–18 UNC x 1-1/4	**BFX90-601-ES-17.5/13-W1**
		6090	.51	.69	.63	2.36	2.13	.72	1.59	.39	.79	1.46	.34	68.86			
19	3/4	420	19	27,2	19	70	72	23,8	50,8	12	28	43	10,5	70,5	M10x35	3/8–16 UNC x 1-1/2	**BFX90-602-ES-27.2/19-W1**
		6090	.75	1.07	.75	2.76	2.83	.94	2.00	.47	1.10	1.69	.41	155.10			
19	3/4	420	16/19	20,3	19	70	72	23,8	50,8	12	28	43	10,5	54,0	M10x35	3/8–16 UNC x 1-1/2	**BFX90-602-ES-20.3/16-W1**
		6090	.63/.74	.80	.75	2.76	2.83	.94	2.00	.47	1.10	1.69	.41	118.80			
19	3/4	420	19	25,3	19	70	72	23,8	50,8	12	28	43	10,5	72,9	M10x35	3/8–16 UNC x 1-1/2	**BFX90-602-ES-25.3/19-W1**
		6090	.75	1.00	.75	2.76	2.83	.94	2.00	.47	1.10	1.69	.41	160.38			
19	3/4	420	25/19	30,3	19	70	72	23,8	50,8	12	28	43	10,5	65,3	M10x35	3/8–16 UNC x 1-1/2	**BFX90-602-ES-30.3/25-W1**
		6090	.98/.74	1.19	.75	2.76	2.83	.94	2.00	.47	1.10	1.69	.41	143.66			
25	1	420	25	34	21	85	79	27,8	57,2	14	34	51	13	108,2	M12x45	7/16–14 UNC x 1-3/4	**BFX90-603-ES-34/25-W1** [2]
		6090	.98	1.34	.83	3.35	3.11	1.09	2.25	.55	1.34	2.01	.51	238.04			
25	1	420	25	30,3	21	85	79	27,8	57,2	14	34	51	13	113,9	M12x45	7/16–14 UNC x 1-3/4	**BFX90-603-ES-30.3/25-W1** [2]
		6090	.98	1.19	.83	3.35	3.11	1.09	2.25	.55	1.34	2.01	.51	250.58			
32	1-1/4	420	32	42,8	25	95	93	31,8	66,6	16	38	56	13,5	161,7	M12x45	1/2–13 UNC x 1-3/4	**BFX90-604-ES-42.8/32-W1**
		6090	1.26	1.69	.98	3.74	3.66	1.25	2.62	.63	1.50	2.20	.53	355.74			
32	1-1/4	420	32	42,8	25	95	93	31,8	66,6	16	38	56	15	145,5	M14x45		**BFX90-604-ES-42.8/32-M14-W1**
		6090	1.26	1.69	.98	3.74	3.66	1.25	2.62	.63	1.50	2.20	.59	320.10			
32	1-1/4	420	22/32	30,3	25	95	93	31,8	66,6	16	38	56	13,5	177,0	M12x45	1/2–13 UNC x 1-3/4	**BFX90-604-ES-30.3/22-W1**
		6090	.87/1.25	1.19	.98	3.74	3.66	1.25	2.62	.63	1.50	2.20	.53	389.40			
32	1-1/4	420	22/32	30,3	25	95	93	31,8	66,6	16	38	56	15	176,6	M14x45		**BFX90-604-ES-30.3/22-M14-W1**
		6090	.87/1.25	1.19	.98	3.74	3.66	1.25	2.62	.63	1.50	2.20	.59	388.52			
32	1-1/4	420	27/32	38,3	25	95	93	31,8	66,6	16	38	56	13,5	176,6	M12x45	1/2–13 UNC x 1-3/4	**BFX90-604-ES-38.3/27-W1**
		6090	1.06/1.25	1.51	.98	3.74	3.66	1.25	2.62	.63	1.50	2.20	.53	388.52			
32	1-1/4	420	27/32	38,3	25	95	93	31,8	66,6	16	38	56	15	161,7	M14x45		**BFX90-604-ES-38.3/27-M14-W1**
		6090	1.06/1.25	1.51	.98	3.74	3.66	1.25	2.62	.63	1.50	2.20	.59	355.74			
38	1-1/2	420	38	48,6	25	110	110	36,5	79,3	18	42	65	17	254,2	M16x50	5/8–11 UNC x 2	**BFX90-605-ES-48.6/38-W1**
		6090	1.50	1.91	.98	4.33	4.33	1.44	3.12	.71	1.65	2.56	.67	559.24			
51	2	420	51	61	35	132	134	44,5	96,8	28	45	75	21	333,6	M20x70	3/4–10 UNC x 2-3/4	**BFX90-606-ES-61/51-W1**
		6090	2.01	2.40	1.38	5.20	5.28	1.75	3.81	1.10	1.77	2.95	.83	733.92			

Please see Page 89 for separate Bolt Sets and Sealings.

[1] The maximum working pressure PN (bar/PSI) applies only to the flange itself and depends on the bolts used (Grade 10.9). The actual maximum working pressure depends on the thickness and the quality of the tube used.

[2] For UNC threaded bolts, use hexagon head bolts only. Please note that these do not belong to our product range.

Materials / Ordering Options / Examples

* SAE Single-Part Flange (without O-ring) made of Steel S355J2 or equivalent, blank (oiled) — **BFX90-...-ES-**/**-W1**
* SAE Single-Part Flange (without O-ring) made of Stainless Steel V4A – 1.4404 (on request) — **BFX90-...-ES-**/**-W5**

* Kit including Metric bolts 10.9, spring rings, O-ring made of NBR (Buna-N®) — **BFX90-...-ES-**/**-W1-K**
* Kit including Metric bolts 10.9, spring rings, O-ring made of FKM (Viton®) — **BFX90-...-ES-**/**-V-W1-K**
* Kit including UNC bolts (Grade 8), spring rings, O-ring made of NBR (Buna-N®) — **BFX90-...-ES-**/**-U-W1-K**

Please always indicate ØB / ØA.

SAE 90° Single-Part Flange with Male Metric Thread and 24° Conical Bore (acc. to ISO 8434-1) ▪ Type BFX90-L/S ▪ 3000 PSI Series

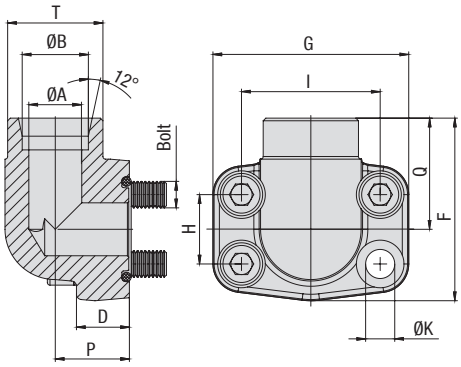

C

3000 PSI Standard Pressure Series (based on ISO 6162-1:2012)

Nominal Size DN	(in)	PN[1] (bar/PSI) 10.9	Dimensions (mm/in) ØA	ØB	Series	D	F	G	H	I	P	Q	T (Metric)	ØK	Weight (kg/lbs) ca. per 100	for Bolts Metric	Ordering Codes
13	1/2	315	11	15	L	16	60	54	17,5	38,1	18	36	22x1,5	9	31,3	M8x30	**BFX90-301-15L-W66**
		4568	.43	.59		.63	2.36	2.13	.69	1.50	.71	1.42		.35	68.86		
13	1/2	350	12	16	S	16	60	54	17,5	38,1	18	36	24x1,5	9	29,4	M8x30	**BFX90-301-16S-W66**
		5075	.47	.63		.63	2.36	2.13	.69	1.50	.71	1.42		.35	64.68		
19	3/4	350	12	16	S	18	63	65	22,3	47,6	22	38	24x1,5	11	29,5	M10x35	**BFX90-302-16S-W66**
		5075	.47	.63		.71	2.48	2.56	.88	1.87	.87	1.50		.43	64.90		
19	3/4	350	16	20	S	18	63	65	22,3	47,6	22	38	30x2	11	43,8	M10x35	**BFX90-302-20S-W66**
		5075	.63	.79		.71	2.48	2.56	.88	1.87	.87	1.50		.43	96.36		
19	3/4	160	18	22	L	18	63	65	22,3	47,6	22	38	30x2	11	43,1	M10x35	**BFX90-302-22L-W66**
		2320	.71	.87		.71	2.48	2.56	.88	1.87	.87	1.50		.43	94.82		
25	1	320	20	25	S	19	70	70	26,2	52,4	28	42	36x2	11	62,5	M10x35	**BFX90-303-25S-W66**
		4641	.79	.98		.75	2.76	2.76	1.03	2.06	1.10	1.65		.43	137.50		
25	1	320	23	28	L	19	70	70	26,2	52,4	28	42	36x2	11	63,4	M10x35	**BFX90-303-28L-W66**
		4641	.91	1.10		.75	2.76	2.76	1.03	2.06	1.10	1.65		.43	139.48		
32	1-1/4	280	20	25	S	22	85	79	30,2	58,7	30	50	36x2	11,5	109,1	M10x40	**BFX90-304-25S-W66**
		4061	.79	.98		.87	3.35	3.11	1.19	2.31	1.18	1.97		.45	240.02		
32	1-1/4	280	25	30	S	22	85	79	30,2	58,7	30	50	42x2	11,5	103,4	M10x40	**BFX90-304-30S-W66**
		4061	.98	1.18		.87	3.35	3.11	1.19	2.31	1.18	1.97		.45	227.48		
32	1-1/4	280	30	35	L	22	85	79	30,2	58,7	30	50	45x2	11,5	89,9	M10x40	**BFX90-304-35L-W66**
		4061	1.18	1.38		.87	3.35	3.11	1.19	2.31	1.18	1.97		.45	197.78		
38	1-1/2	210	32	38	S	25	95	93	35,7	69,8	36	58	52x2	13,5	151,6	M12x45	**BFX90-305-38S-W66**
		3045	1.26	1.50		.98	3.74	3.66	1.41	2.75	1.42	2.28		.53	333.52		
38	1-1/2	210	36	42	L	25	95	93	35,7	69,8	36	58	52x2	13,5	141,3	M12x45	**BFX90-305-42L-W66**
		3045	1.42	1.65		.98	3.74	3.66	1.41	2.75	1.42	2.28		.53	310.96		

Please see Page 89 for separate Bolt Sets and Sealings.

Materials / Ordering Options / Examples

* SAE Single-Part Flange (without O-ring) made of Steel S355J2 / C45 or equivalent, zinc-plated and thick-film-passivated — **BFX90-...-...-W66**
* SAE Single-Part Flange (without O-ring) made of Stainless Steel V4A – 1.4404 (on request) — **BFX90-...-...-W5**

* Kit including Metric bolts 10.9, spring rings, O-ring made of NBR (Buna-N®) — **BFX90-...-...-W130-K**
* Kit including Metric bolts 10.9, spring rings, O-ring made of FKM (Viton®) — **BFX90-...-...-V-W130-K**

Please always indicate ØB and Series.

[1] The maximum working pressure PN (bar/PSI) applies only to the flange itself and depends on the bolts used (Grade 10.9). The actual maximum working pressure depends on the thickness and the quality of the tube used.

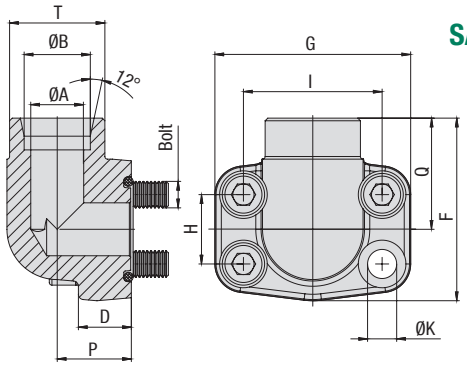

SAE 90° Single-Part Flange with Male Metric Thread and 24° Conical Bore (acc. to ISO 8434-1) ▪ Type BFX90-L/S ▪ 6000 PSI Series

6000 PSI High Pressure Series (based on ISO 6162-2:2012)

Nominal Size DN	(in)	PN[1] (bar/PSI) 10.9	Dimensions (mm/in) ØA	ØB	Series	D	F	G	H	I	P	Q	T (Metric)	ØK	Weight (kg/lbs) ca. per 100	for Bolts Metric	Ordering Codes
13	1/2	420	12	16	S	16	60	54	18,2	40,5	20	36	24x1,5	9	29,8	M8x30	**BFX90-601-16S-W66**
		6090	.47	.63		.63	2.36	2.13	.72	1.59	.79	1.42		.35	65.56		
19	3/4	420	12	16	S	19	70	72	23,8	50,8	26	41	24x1,5	11	64,3	M10x35	**BFX90-602-16S-W66**
		6090	.47	.63		.75	2.76	2.83	.94	2.00	1.02	1.61		.43	141.46		
19	3/4	400	20	20	S	19	70	72	23,8	50,8	26	41	30x2	11	66,5	M10x35	**BFX90-602-20S-W66**
		5800	.79	.79		.75	2.76	2.83	.94	2.00	1.02	1.61		.43	146.30		
25	1	400	20	25	S	24	85	79	27,8	57,2	30	50	36x2	13	106,3	M12x40	**BFX90-603-25S-W66** [2]
		5800	.79	.98		.94	3.35	3.11	1.09	2.25	1.18	1.97		.51	233.86		
32	1-1/4	400	25	30	S	25	95	93	31,8	66,6	36	58	42x2	15	159,5	M14x45	**BFX90-604-30S-M14-W66**
		5800	.98	1.18		.98	3.74	3.66	1.25	2.62	1.42	2.28		.59	350.90		
38	1-1/2	400	32	38	S	26	110	110	36,5	79,3	41	65	52x2	17	240,2	M16x50	**BFX90-605-38S-W66**
		5800	1.26	1.50		1.02	4.33	4.33	1.44	3.12	1.61	2.56		.67	528.44		

Please see Page 89 for separate Bolt Sets and Sealings.

[1] The maximum working pressure PN (bar/PSI) applies only to the flange itself and depends on the bolts used (Grade 10.9). The actual maximum working pressure depends on the thickness and the quality of the tube used.

[2] For UNC threaded bolts, use hexagon head bolts only. Please note that these do not belong to our product range.

Materials / Ordering Options / Examples

* SAE Single-Part Flange (without O-ring) made of Steel S355J2 / C45 or equivalent, zinc-plated and thick-film-passivated — **BFX90-...-...-W66**
* SAE Single-Part Flange (without O-ring) made of Stainless Steel V4A – 1.4404 (on request) — **BFX90-...-...-W5**

* Kit including Metric bolts 10.9, spring rings, O-ring made of NBR (Buna-N®) — **BFX90-...-...-W130-K**
* Kit including Metric bolts 10.9, spring rings, O-ring made of FKM (Viton®) — **BFX90-...-...-V-W130-K**

Please always indicate ØB and Series.

SAE Single-Part Blanking Flange 82

BFX-CP

SAE Single-Part Blanking Counterflange 83

BAS-CP

SAE Sandwich Plate with Female BSPP Port 84

SPL-G04-L

SAE Blindplug (Standard) 85

CAG-BP

SAE Blindplug (High) 85

CAG-BPH

SAE Sandwich Plate 86

SPL

SAE Cover Plate 87

CPL

SAE Reducing Flange 88

BFX-BAS

Separate Bolt Sets and Sealings 89

D

SAE Single-Part Blanking Flange
Type BFX-CP ▪ 3000 / 6000 PSI Series

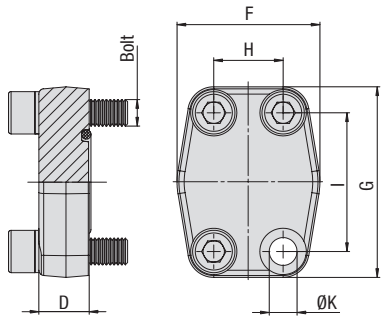

3000 PSI Standard Pressure Series (based on ISO 6162-1:2012)

Nominal Size DN	(in)	PN[1] (bar/PSI) 10.9	Dimensions (mm/in) D	F	G	H	I	ØK[3]	Weight (kg/lbs) ca. per 100	for Bolts Metric[3]	UNC	Ordering Codes
13	1/2	350	16	47	57	17,5	38,1	8,7	22,3	M8x30	5/16–18 UNC x 1-1/4	**BFX-301-CP-W1**
		5075	.63	1.85	2.24	.69	1.50	.34	49.06			
19	3/4	350	18	50	67	22,3	47,6	10,5	34,1	M10x35	3/8–16 UNC x 1-1/2	**BFX-302-CP-W1**
		5075	.71	1.97	2.64	.88	1.87	.41	75.02			
25	1	320	19	54	72	26,2	52,4	10,5	39,9	M10x35	3/8–16 UNC x 1-1/2	**BFX-303-CP-W1**
		4641	.75	2.13	2.83	1.03	2.06	.41	87.78			
32	1-1/4	280	18	68	82	30,2	58,7	11,5 (13,5)	56,3	M10x40 (M12x40)	7/16–14 UNC x 1-1/2	**BFX-304-CP-W1**
		4061	.71	2.68	3.23	1.19	2.31	.45 (.53)	123.86			
38	1-1/2	210	20	79	96	35,7	69,9	13,5 (14,5)	89,7	M12x45 (M14x45)	1/2–13 UNC x 1-3/4	**BFX-305-CP-W1**
		3045	.79	3.11	3.78	1.41	2.75	.53 (.57)	197.34			
51	2	210	20	88	102	42,9	77,8	13,5 (14,5)	105,7	M12x45 (M14x45)	1/2–13 UNC x 1-3/4	**BFX-306-CP-W1**
		3045	.79	3.46	4.02	1.69	3.06	.53 (.57)	232.54			
64	2-1/2	175	20	101	115	50,8	88,9	13,5 (14,5)	141,5	M12x45 (M14x45)	1/2–13 UNC x 1-3/4	**BFX-307-CP-W1**
		2538	.79	3.98	4.53	2.00	3.50	.53 (.57)	311.27			
76	3	160	24	127	137	61,9	106,4	17	237,7	M16x50	5/8–11 UNC x 2	**BFX-308-CP-W1**
		2320	.94	5.00	5.39	2.44	4.19	.67	522.94			
89	3-1/2	35	22	138	155	69,8	120,7	17	280,5	M16x50	5/8–11 UNC x 2	**BFX-309-CP-W1**
		508	.87	5.43	6.10	2.75	4.75	.67	617.10			
102	4	35	25	147	163	77,8	130,2	17	382,6	M16x50	5/8–11 UNC x 2	**BFX-310-CP-W1**
		508	.98	5.79	6.42	3.06	5.13	.67	841.72			
127	5	35	25	180	184	92	152,4	17	582,0	M16x55	5/8–11 UNC x 2-1/4	**BFX-311-CP-W1**
		508	.98	7.09	7.24	3.62	6.00	.67	1280.40			

Please see Page 89 for separate Bolt Sets and Sealings.

6000 PSI High Pressure Series (based on ISO 6162-2:2012)

Nominal Size DN	(in)	PN[1] (bar/PSI) 10.9	Dimensions (mm/in) D	F	G	H	I	ØK	Weight (kg/lbs) ca. per 100	for Bolts Metric	UNC	Ordering Codes
13	1/2	420	16	47	57	18,2	40,5	8,7	22,3	M8x30	5/16–18 UNC x 1-1/4	**BFX-601-CP-W1**
		6090	.63	1.85	2.24	.72	1.59	.34	49.06			
19	3/4	420	19	54	72	23,8	50,8	10,5	44,0	M10x35	3/8–16 UNC x 1-1/2	**BFX-602-CP-W1**
		6090	.75	2.13	2.83	.94	2.00	.41	96.80			
25	1	420	24	68	82	27,8	57,2	13	74,8	M12x45	7/16–14 UNC x 1-3/4	**BFX-603-CP-W1** [2]
		6090	.94	2.68	3.23	1.09	2.25	.51	164.56			
32	1-1/4	420	27	79	95	31,8	66,6	13,5	117,3	M12x45	1/2–13 UNC x 1-3/4	**BFX-604-CP-W1**
		6090	1.06	3.11	3.74	1.25	2.62	.53	258.06			
32	1-1/4	420	27	79	95	31,8	66,6	15	118,0	M14x45		**BFX-604-CP-M14-W1**
		6090	1.06	3.11	3.74	1.25	2.62	.59	259.60			
38	1-1/2	420	30	88	108	36,5	79,3	17	155,0	M16x55	5/8–11 UNC x 2-1/4	**BFX-605-CP-W1**
		6090	1.18	3.46	4.25	1.44	3.12	.67	341.00			
51	2	420	30	118	137	44,5	96,8	21	267,2	M20x65	3/4–10 UNC x 2-3/4	**BFX-606-CP-W1**
		6090	1.18	4.65	5.39	1.75	3.81	.83	587.84			
64	2-1/2	420	45	152	180	58,7	123,8	26	758,4	M24x80		**BFX-607-CP-W1**
		6090	1.77	5.98	7.09	2.31	4.87	1.02	1668.48			
76	3	420	55	178	208	71,4	152,4	33	1201,8	M30x100		**BFX-608-CP-W1**
		6090	2.17	7.01	8.19	2.81	6.00	1.30	2643.96			

Please see Page 89 for separate Bolt Sets and Sealings.

Materials / Ordering Options / Examples

* SAE Single-Part Blanking Flange (without O-ring) made of Steel S355J2 / C45 or equivalent, blank (oiled) **BFX-...-CP-W1**
* SAE Single-Part Blanking Flange (without O-ring) made of Stainless Steel V4A – 1.4404 (on request) **BFX-...-CP-W5**

* Kit including Metric bolts 10.9, spring rings, O-ring made of NBR (Buna-N®) **BFX-...-CP-W1-K**
* Kit including Metric bolts 10.9, spring rings, O-ring made of FKM (Viton®) **BFX-...-CP-V-W1-K**
* Kit including UNC bolts (Grade 8), spring rings, O-ring made of NBR (Buna-N®) **BFX-...-CP-U-W1-K**

[1] The maximum working pressure PN (bar/PSI) applies only to the flange itself and depends on the bolts used (Grade 10.9). The actual maximum working pressure depends on the thickness and the quality of the tube used.

[2] For UNC threaded bolts, use hexagon head bolts only. Please note that these do not belong to our product range.

[3] Alternative options shown in brackets are available on request.

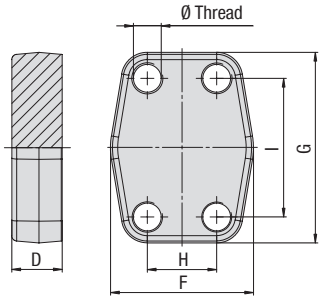

SAE Single-Part Blanking Counterflange
Type BAS-CP ▪ 3000 / 6000 PSI Series

3000 PSI Standard Pressure Series (based on ISO 6162-1:2012)

Nominal Size DN	(in)	PN[1] (bar/PSI) 10.9	Dimensions (mm/in) D	F	G	H	I	Weight (kg/lbs) ca. per 100	for Bolts Metric[3]	UNC	Ordering Codes
13	1/2	350	16	47	57	17,5	38,1	25,2	M8	5/16–18 UNC	BAS-301-CP-W1
		5075	.63	1.85	2.24	.69	1.50	55.44			
19	3/4	350	18	50	67	22,3	47,6	31,9	M10	3/8–16 UNC	BAS-302-CP-W1
		5075	.71	1.97	2.64	.88	1.87	70.18			
25	1	320	19	54	72	26,2	52,4	49,1	M10	3/8–16 UNC	BAS-303-CP-W1
		4641	.75	2.13	2.83	1.03	2.06	108.02			
32	1-1/4	280	18	68	82	30,2	58,7	60,0	M10 (M12)	7/16–14 UNC	BAS-304-CP-W1
		4061	.71	2.68	3.23	1.19	2.31	132.00			
38	1-1/2	210	20	79	96	35,7	69,9	83,4	M12 (M14)	1/2–13 UNC	BAS-305-CP-W1
		3045	.79	3.11	3.78	1.41	2.75	183.48			
51	2	210	20	88	102	42,9	77,8	110,6	M12 (M14)	1/2–13 UNC	BAS-306-CP-W1
		3045	.79	3.46	4.02	1.69	3.06	243.32			
64	2-1/2	175	20	101	115	50,8	88,9	145,2	M12 (M14)	1/2–13 UNC	BAS-307-CP-W1
		2538	.79	3.98	4.53	2.00	3.50	319.44			
76	3	160	24	127	137	61,9	106,4	252,4	M16	5/8–11 UNC	BAS-308-CP-W1
		2320	.94	5.00	5.39	2.44	4.19	555.28			
89	3-1/2	35	22	138	155	69,8	120,7	292,8	M16	5/8–11 UNC	BAS-309-CP-W1
		508	.87	5.43	6.10	2.75	4.75	644.16			
102	4	35	25	147	163	77,8	130,2	379,6	M16	5/8–11 UNC	BAS-310-CP-W1
		508	.98	5.79	6.42	3.06	5.13	835.12			
127	5	35	25	180	184	92	152,4	586,3	M16	5/8–11 UNC	BAS-311-CP-W1
		508	.98	7.09	7.24	3.62	6.00	1289.86			

Please see Page 89 for separate Bolt Sets and Sealings.

6000 PSI High Pressure Series (based on ISO 6162-2:2012)

Nominal Size DN	(in)	PN[1] (bar/PSI) 10.9	Dimensions (mm/in) D	F	G	H	I	Weight (kg/lbs) ca. per 100	for Bolts Metric	UNC	Ordering Codes
13	1/2	420	16	47	57	18,2	40,5	25,6	M8	5/16–18 UNC	BAS-601-CP-W1
		6090	.63	1.85	2.24	.72	1.59	56.32			
19	3/4	420	19	54	72	23,8	50,8	49,0	M10	3/8–16 UNC	BAS-602-CP-W1
		6090	.75	2.13	2.83	.94	2.00	107.80			
25	1	420	24	68	82	27,8	57,2	79,5	M12	7/16–14 UNC	BAS-603-CP-W1
		6090	.94	2.68	3.23	1.09	2.25	174.90			
32	1-1/4	420	27	79	95	31,8	66,6	122,4	M12	1/2–13 UNC	BAS-604-CP-W1
		6090	1.06	3.11	3.74	1.25	2.62	269.28			
32	1-1/4	420	27	79	95	31,8	66,6	114,9	M14		BAS-604-CP-M14-W1
		6090	1.06	3.11	3.74	1.25	2.62	252.78			
38	1-1/2	420	30	88	108	36,5	79,3	185,1	M16	5/8–11 UNC	BAS-605-CP-W1
		6090	1.18	3.46	4.25	1.44	3.12	407.22			
51	2	420	30	118	137	44,5	96,8	266,7	M20	3/4–10 UNC	BAS-606-CP-W1
		6090	1.18	4.65	5.39	1.75	3.81	586.74			
64	2-1/2	420	45	152	180	58,7	123,8	774,6	M24		BAS-607-CP-W1
		6090	1.77	5.98	7.09	2.31	4.87	1704.12			
76	3	420	55	178	208	71,4	152,4	737,4	M30		BAS-608-CP-W1
		6090	2.17	7.01	8.19	2.81	6.00	1622.28			

Please see Page 89 for separate Bolt Sets and Sealings.

[1] The maximum working pressure PN (bar/PSI) applies only to the flange itself and depends on the bolts used (Grade 10.9). The actual maximum working pressure depends on the thickness and the quality of the tube used.

[3] Alternative options shown in brackets are available on request.

Materials / Ordering Options / Examples

* SAE Single-Part Blanking Counterflange made of Steel S355J2 or equivalent, blank (oiled) with Metric tapped holes — **BAS-...-CP-W1**
* SAE Single-Part Blanking Counterflange made of Stainless Steel V4A – 1.4404 (on request) with Metric tapped holes — **BAS-...-CP-W5**
* SAE Single-Part Blanking Counterflange made of Steel S355J2 or equivalent, blank (oiled) with size of Metric tapped holes deviating from the standard (e.g. M14) — **BAS-...-CP-M14-W1**
* SAE Single-Part Blanking Counterflange made of Steel S355J2 or equivalent, blank (oiled) with UNC tapped holes — **BAS-...-CP-U-W1**

SAE Sandwich Plate with Female BSPP Port
Type SPL-G04-L ▪ 3000 / 6000 PSI Series

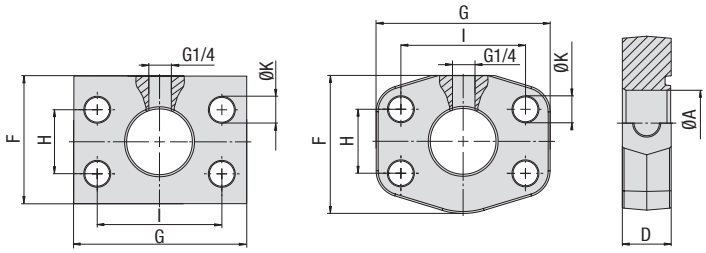

Version A Version B

3000 PSI Standard Pressure Series (based on ISO 6162-1:2012)

Nominal Size DN	(in)	PN[1] (bar/PSI) 10.9	Dimensions (mm/in) ØA	D	F	G	H	I	ØK	Version	Weight (kg/lbs) ca. per 100	Ordering Codes
13	1/2	350	12	24	40	55	17,5	38,1	8,7	A	30,8	SPL-301-G04-L-W1
		5075	.47	.94	1.57	2.17	.69	1.50	.34		67.76	
19	3/4	350	19	28	50	65	22,3	47,6	10,5	A	52,3	SPL-302-G04-L-W1
		5075	.75	1.10	1.97	2.56	.88	1.87	.41		115.06	
25	1	320	24	25	60	70,6	26,2	52,4	10,5	B	51,2	SPL-303-G04-L-W1
		4641	.94	.98	2.36	2.78	1.03	2.06	.41		112.64	
32	1-1/4	280	31	23	68	82	30,2	58,7	11,5	B	56,4	SPL-304-G04-L-W1
		4061	1.22	.91	2.68	3.23	1.19	2.31	.45		124.08	
38	1-1/2	210	38	24	79	96	35,7	69,9	13,5	B	86,2	SPL-305-G04-L-W1
		3045	1.50	.94	3.11	3.78	1.41	2.75	.53		189.64	
51	2	210	50	24	88	102	42,9	77,8	13,5	B	93,2	SPL-306-G04-L-W1
		3045	1.97	.94	3.46	4.02	1.69	3.06	.53		205.04	

Please see Page 89 for separate Bolt Sets and Sealings.

6000 PSI High Pressure Series (based on ISO 6162-2:2012)

Nominal Size DN	(in)	PN[1] (bar/PSI) 10.9	Dimensions (mm/in) ØA	D	F	G	H	I	ØK	Version	Weight (kg/lbs) ca. per 100	Ordering Codes
13	1/2	420	12	24	40	55	18,2	40,5	8,7	A	29,0	SPL-601-G04-L-W1
		6090	.47	.94	1.57	2.17	.72	1.59	.34		63.80	
19	3/4	420	19	25	60	70,6	23,8	50,8	10,5	A	53,1	SPL-602-G04-L-W1
		6090	.75	.98	2.36	2.78	.94	2.00	.41		116.82	
25	1	420	25	23	68	82	27,8	57,2	13	B	60,3	SPL-603-G04-L-W1
		6090	.98	.91	2.68	3.23	1.09	2.25	.51		132.66	
32	1-1/4	420	31	25	79	95	31,8	66,6	13,5	B	94,2	SPL-604-G04-L-W1
		6090	1.22	.98	3.11	3.74	1.25	2.62	.53		207.24	
32	1-1/4	420	31	25	79	95	31,8	66,6	15	B	89,2	SPL-604-G04-L-M14-W1
		6090	1.22	.98	3.11	3.74	1.25	2.62	.59		196.24	
38	1-1/2	420	38	28	88	108	36,5	79,3	17	B	147,3	SPL-605-G04-L-W1
		6090	1.50	1.10	3.46	4.25	1.44	3.12	.67		324.06	
51	2	420	50	33	118	137	44,5	96,8	21	B	268,6	SPL-606-G04-L-W1
		6090	1.97	1.30	4.65	5.39	1.75	3.81	.83		590.92	

Please see Page 89 for separate Bolt Sets and Sealings.

Materials / Ordering Options / Examples

* SAE Sandwich Plate with Female BSPP Port (without O-ring) made of Steel S355J2 / C45 or equivalent, blank (oiled) **SPL-...-G04-L-W1**
* SAE Sandwich Plate with Female BSPP Port (without O-ring) made of Stainless Steel V4A – 1.4404 (on request) **SPL-...-G04-L-W5**

Use the female BSPP port of the SAE Sandwich Plate to permanently install a pressure sensor, a hydraulic test coupling or any sort of diagnostic equipment in your hydraulic system. Contact STAUFF for details.

[1] The maximum working pressure PN (bar/PSI) applies only to the flange itself and depends on the bolts used (Grade 10.9).

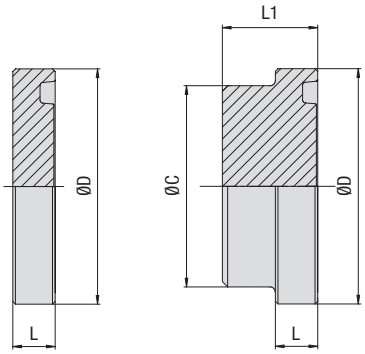

CAG-BP CAG-BPH

SAE Blindplug
Type CAG-BP (Standard) / CAG-BPH (High) ▪ 3000 / 6000 PSI Series

3000 PSI Standard Pressure Series (based on ISO 6162-1:2012)

Nominal Size DN	(in)	PN (bar/PSI) BP	BPH	Dimensions (mm/in) ØC	ØD	L	L1	Weight (kg/lbs) ca. per 100 CAG-BP	Weight (kg/lbs) ca. per 100 CAG-BPH	Ordering Codes	Ordering Codes
13	1/2	210	350	24	30,2	6,8	15	3,1	6,0	CAG-BP-301-W66	CAG-BPH-301-W66
		3045	5075	.94	1.19	.27	.59	6.82	13.20		
19	3/4	210	350	31,5	38,1	6,8	16	5,2	11,0	CAG-BP-302-W66	CAG-BPH-302-W66
		3045	5075	1.24	1.50	.27	.63	11.44	24.20		
25	1	210	320	38	44,45	8	18	8,9	17,9	CAG-BP-303-W66	CAG-BPH-303-W66
		3045	4641	1.50	1.75	.31	.71	19.58	39.38		
32	1-1/4	200	280	43	50,8	8	18	11,2	23,3	CAG-BP-304-W66	CAG-BPH-304-W66
		2900	4061	1.69	2.00	.31	.71	24.64	51.26		
38	1-1/2	160	210	50	60,35	8	18	16,2	32,2	CAG-BP-305-W66	CAG-BPH-305-W66
		2320	3045	1.97	2.38	.31	.71	35.64	70.84		
51	2	160	210	61,8	71,4	9,6	19	27,9	56,1	CAG-BP-306-W66	CAG-BPH-306-W66
		2320	3045	2.43	2.81	.38	.75	61.38	123.42		
64	2-1/2	100	175	73,8	84,1	9,6	40	39,2	78,0	CAG-BP-307-W66	CAG-BPH-307-W66
		1450	2538	2.91	3.31	.38	1.57	86.24	171.60		
76	3	100	160	90	101,6	9,6	45	57,8	235,2	CAG-BP-308-W66	CAG-BPH-308-W66
		1450	2320	3.54	4.00	.38	1.77	127.16	517.44		
89	3-1/2	35	35	102	114,3	11,3	30	86,2	303,1	CAG-BP-309-W66	CAG-BPH-309-W66
		508	508	4.02	4.50	.44	1.18	189.64	666.82		
102	4	35	35	114	127	11,3	36	107,4	458,8	CAG-BP-310-W66	CAG-BPH-310-W66
		508	508	4.49	5.00	.44	1.42	236.28	1009.28		

Please see Page 89 for separate Bolt Sets and Sealings.

6000 PSI High Pressure Series (based on ISO 6162-2:2012)

Nominal Size DN	(in)	PN (bar/PSI) BP	BPH	Dimensions (mm/in) ØC	ØD	L	L1	Weight (kg/lbs) ca. per 100 CAG-BP	Weight (kg/lbs) ca. per 100 CAG-BPH	Ordering Codes	Ordering Codes
13	1/2	250	350	24	31,8	7,8	14	4,0	8,4	CAG-BP-601-W66	CAG-BPH-601-W66
		3625	5075	.94	1.25	.31	.55	8.80	18.48		
19	3/4	250	350	32	41,3	8,8	15	8,6	16,3	CAG-BP-602-W66	CAG-BPH-602-W66
		3625	5075	1.26	1.63	.35	.59	18.92	35.86		
25	1	250	350	38	47,6	9,5	16	12,4	26,9	CAG-BP-603-W66	CAG-BPH-603-W66
		3625	5075	1.50	1.87	.37	.63	27.28	59.18		
32	1-1/4	250	350	43,8	54	10,3	16	17,7	42,2	CAG-BP-604-W66 [2]	CAG-BPH-604-W66 [2]
		3625	5075	1.72	2.13	.41	.63	38.94	92.84		
38	1-1/2	250	350	50,8	63,5	12,6	19	29,5	64,6	CAG-BP-605-W66	CAG-BPH-605-W66
		3625	5075	2.00	2.50	.50	.75	64.90	142.12		
51	2	250	350	66,5	79,4	12,6	30	47,1	129,4	CAG-BP-606-W66	CAG-BPH-606-W66
		3625	5075	2.62	3.13	.50	1.18	103.62	284.68		
64	2-1/2	250	350	89	108	21,2	45		265,6		CAG-BPH-607-W66
		3625	5075	3.50	4.25	.83	1.77		584.32		

Please see Page 89 for separate Bolt Sets and Sealings.

[2] According to ISO 6162-2 bolts M12 should be used but because usually bolts M14 are used the description of the complete part must show M14 (e.g. CAG-BP-604-M14-W130-K).

Materials / Ordering Options / Examples

* SAE Blindplug (without O-ring) made of Steel S355J2 / C45 or equivalent, zinc-plated and thick-film-passivated **CAG-BP-...-W66**
* SAE Blindplug (without O-ring) made of Stainless Steel V4A – 1.4404 (on request) **CAG-BP-...-W5**
* SAE Counterflange Blindplug made of Steel S355J2 / C45 or equivalent, zinc-plated and thick-film-passivated **CSG-BP-...-W66**

* Kit with DB including Metric bolts 10.9, spring rings, O-ring made of NBR (Buna-N®) **CAG-BP-...-W130-K**
* Kit with DB including Metric bolts 10.9, spring rings, O-ring made of FKM (Viton®) **CAG-BP-...-V-W130-K**
* Kit with DB including UNC bolts (Grade 8), spring rings, O-ring made of NBR (Buna-N®) **CAG-BP-...-U-W130-K**
* Kit with BM including Metric bolts 10.9, spring rings, O-ring made of NBR (Buna-N®) **CAG-BP-...-BM-W130-K**

SAE Sandwich Plate
Type SPL ▪ 3000 / 6000 PSI Series

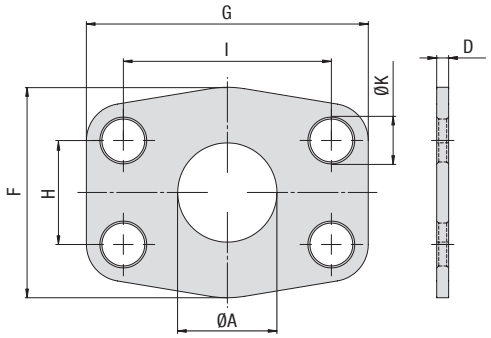

D

3000 PSI Standard Pressure Series (based on ISO 6162-1:2012)

Nominal Size DN	(in)	Dimensions (mm/in) ØA	D	F	G	H	I	ØK	Weight (kg/lbs) ca. per 100	Ordering Codes
13	1/2	13	3	47	57	17,5	38,1	9	4,1	SPL-301-W1
		.51	.12	1.85	2.24	.69	1.50	.35	9.02	
19	3/4	19	3	49	66	22,3	47,6	11	5,1	SPL-302-W1
		.75	.12	1.93	2.60	.88	1.87	.43	11.22	
25	1	25	3	53	71	26,2	52,4	11	5,7	SPL-303-W1
		.98	.12	2.09	2.80	1.03	2.06	.43	12.54	
32	1-1/4	32	3	69	80	30,2	58,7	11,5	8,2	SPL-304-W1
		1.26	.12	2.72	3.15	1.19	2.31	.45	18.04	
38	1-1/2	38	3	77	95	35,7	69,9	13,5	10,5	SPL-305-W1
		1.50	.12	3.03	3.74	1.41	2.75	.53	23.10	
51	2	51	3	89	103	42,9	77,8	13,5	12,3	SPL-306-W1
		2.01	.12	3.50	4.06	1.69	3.06	.53	27.06	
64	2-1/2	63	3	101	116	50,8	88,9	13,5	14,2	SPL-307-W1
		2.48	.12	3.98	4.57	2.00	3.50	.53	31.24	
76	3	73	4	124	136	61,9	106,4	17	27,3	SPL-308-W1
		2.87	.16	4.88	5.35	2.44	4.19	.67	60.06	
89	3-1/2	89	4	136	152	69,8	120,7	17	33,2	SPL-309-W1
		3.50	.16	5.35	5.98	2.75	4.75	.67	73.04	
102	4	99	4	146	162	77,8	130,2	17	36,5	SPL-310-W1
		3.90	.16	5.75	6.38	3.06	5.13	.67	80.30	
127	5	120	4	180	184	92	152,4	17	49,7	SPL-311-W1
		4.72	.16	7.09	7.24	3.62	6.00	.67	109.34	

6000 PSI High Pressure Series (based on ISO 6162-2:2012)

Nominal Size DN	(in)	Dimensions (mm/in) ØA	D	F	G	H	I	ØK	Weight (kg/lbs) ca. per 100	Ordering Codes
13	1/2	13	4	47	57	18,2	40,5	9	5,6	SPL-601-W1
		.51	.16	1.85	2.24	.72	1.59	.35	12.32	
19	3/4	17	4	53	71	23,8	50,8	11	8,0	SPL-602-W1
		.67	.16	2.09	2.80	.94	2.00	.43	17.60	
25	1	24	4	66	80	27,8	57,2	13	10,9	SPL-603-W1
		.94	.16	2.60	3.15	1.09	2.25	.51	23.98	
32	1-1/4	31	4	77	94	31,8	66,6	15	14,6	SPL-604-M14-W1
		1.22	.16	3.03	3.70	1.25	2.62	.59	32.12	
38	1-1/2	38	4	89	103	36,5	79,3	17	18,1	SPL-605-W1
		1.50	.16	3.50	4.06	1.44	3.12	.67	39.82	
51	2	51	4	116	135	44,5	96,8	21	29,3	SPL-606-W1
		2.01	.16	4.57	5.31	1.75	3.81	.83	64.46	
64	2-1/2	63	4	150	166	58,7	123,8	25	48,1	SPL-607-W1
		2.48	.16	5.91	6.54	2.31	4.87	.98	105.82	
76	3	73	4	178	208	71,4	152,4	32	71,5	SPL-608-W1
		2.87	.16	7.01	8.19	2.81	6.00	1.26	157.30	

Materials / Ordering Options / Examples

* SAE Sandwich Plate made of Steel ST35 or equivalent, blank (oiled) **SPL-...-W1**

SAE Cover Plate
Type CPL ▪ 3000 / 6000 PSI Series

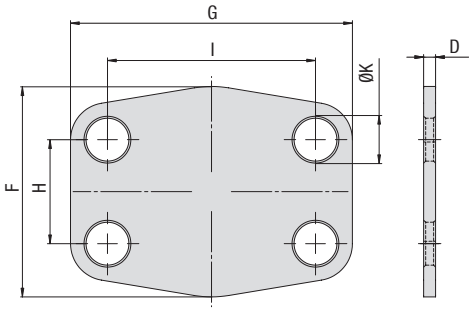

3000 PSI Standard Pressure Series (based on ISO 6162-1:2012)

Nominal Size DN	(in)	Dimensions (mm/in) D	F	G	H	I	ØK	Weight (kg/lbs) ca. per 100	Ordering Codes
13	1/2	3	47	57	17,5	38,1	9	4,3	CPL-301-W1
		.12	1.85	2.24	.69	1.50	.35	9.46	
19	3/4	3	49	66	22,3	47,6	11	5,7	CPL-302-W1
		.12	1.93	2.60	.88	1.87	.43	12.54	
25	1	3	53	71	26,2	52,4	11	6,9	CPL-303-W1
		.12	2.09	2.80	1.03	2.06	.43	15.18	
32	1-1/4	3	69	80	30,2	58,7	11,5	9,7	CPL-304-W1
		.12	2.72	3.15	1.19	2.31	.45	21.34	
38	1-1/2	3	77	95	35,7	69,9	13,5	12,8	CPL-305-W1
		.12	3.03	3.74	1.41	2.75	.53	28.16	
51	2	3	89	103	42,9	77,8	13,5	16,5	CPL-306-W1
		.12	3.50	4.06	1.69	3.06	.53	36.30	
64	2-1/2	3	101	116	50,8	88,9	13,5	22,3	CPL-307-W1
		.12	3.98	4.57	2.00	3.50	.53	49.06	
76	3	4	124	136	61,9	106,4	17	40,3	CPL-308-W1
		.16	4.88	5.35	2.44	4.19	.67	88.66	
89	3-1/2	4	136	152	69,8	120,7	17	53,3	CPL-309-W1
		.16	5.35	5.98	2.75	4.75	.67	117.26	
102	4	4	146	162	77,8	130,2	17	61,1	CPL-310-W1
		.16	5.75	6.38	3.06	5.13	.67	134.42	
127	5	4	180	184	92	152,4	17	85,5	CPL-311-W1
		.16	7.09	7.24	3.62	6.00	.67	188.10	

6000 PSI High Pressure Series (based on ISO 6162-2:2012)

Nominal Size DN	(in)	Dimensions (mm/in) D	F	G	H	I	ØK	Weight (kg/lbs) ca. per 100	Ordering Codes
13	1/2	4	47	57	18,2	40,5	9	6,0	CPL-601-W1
		.16	1.85	2.24	.72	1.59	.35	13.20	
19	3/4	4	53	71	23,8	50,8	11	9,0	CPL-602-W1
		.16	2.09	2.80	.94	2.00	.43	19.80	
25	1	4	66	80	27,8	57,2	13	12,8	CPL-603-W1
		.16	2.60	3.15	1.09	2.25	.51	28.16	
32	1-1/4	4	77	94	31,8	66,6	15	16,7	CPL-604-M14-W1
		.16	3.03	3.70	1.25	2.62	.59	36.74	
38	1-1/2	4	89	103	36,5	79,3	17	21,8	CPL-605-W1
		.16	3.50	4.06	1.44	3.12	.67	47.96	
51	2	4	116	135	44,5	96,8	21	36,6	CPL-606-W1
		.16	4.57	5.31	1.75	3.81	.83	80.52	
64	2-1/2	4	150	166	58,7	123,8	25	57,6	CPL-607-W1
		.16	5.91	6.54	2.31	4.87	.98	126.72	
76	3	4	178	208	71,4	152,4	32	85,6	CPL-608-W1
		.16	7.01	8.19	2.81	6.00	1.26	188.32	

Materials / Ordering Options / Examples

* SAE Cover Plate made of Steel ST35 or equivalent, blank (oiled) **CPL-...-W1**

SAE Reducing Flange
Type BFX-...-BAS-... ▪ 3000 / 6000 PSI Series

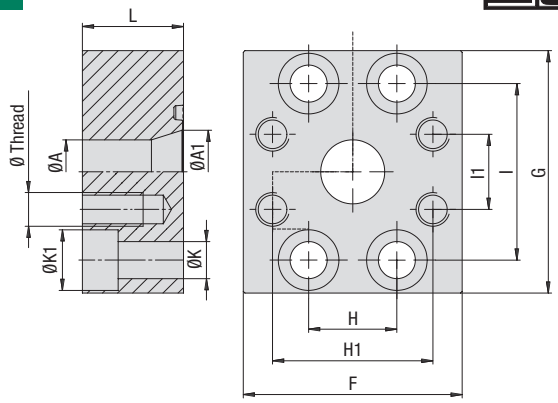

3000 PSI Standard Pressure Series (based on ISO 6162-1:2012)

Nominal Size DN	(in)	Dimensions (mm/in) ØA	ØA1	F	G	H	H1	I	I1	L	ØK	ØK1	Weight (kg/lbs) ca. per 100	for Bolts Metric	Ø Thread Metric	Ordering Codes
25	1	19	25	65	72	26,2	47,6	52,4	22,3	30	11	18	83,0	M10x30	M10	BFX-303-BAS-302-W1
		.75	.98	2.56	2.83	1.03	1.87	2.06	.88	1.18	.43	.71	182.60			
32	1-1/4	25	32	70	80	30,2	52,4	58,7	26,2	30	11	18	99,0	M10x30	M10	BFX-304-BAS-303-W1
		.98	1.26	2.76	3.15	1.19	2.06	2.31	1.03	1.18	.43	.71	217.80			
38	1-1/2	32	38	80	95	35,7	58,7	69,9	30,2	30	13,5	20	133,0	M12x35	M10	BFX-305-BAS-304-W1
		1.26	1.50	3.15	3.74	1.41	2.31	2.75	1.19	1.18	.53	.79	292.60			
51	2	32	51	95	100	42,9	58,7	77,8	30,2	30	13,5	20	165,6	M12x35	M10	BFX-306-BAS-304-W1
		1.26	2.01	3.74	3.94	1.69	2.31	3.06	1.19	1.18	.53	.79	364.32			
51	2	38	46	95	120	42,9	69,9	77,8	35,7	30	13,5	20	166,0	M12x35	M12	BFX-306-BAS-305-W1
		1.50	1.81	3.74	4.72	1.69	2.75	3.06	1.41	1.18	.53	.79	365.20			
64	2-1/2	38	62	109	114	50,8	69,9	88,9	35,7	35	13,5	20	257,0	M12x40	M12	BFX-307-BAS-305-W1
		1.50	2.44	4.29	4.49	2.00	2.75	3.50	1.41	1.38	.53	.79	565.40			
64	2-1/2	51	64	109	114	50,8	77,8	88,9	42,9	35	13,5	20	244,0	M12x40	M12	BFX-307-BAS-306-W1
		2.01	2.52	4.29	4.49	2.00	3.06	3.50	1.69	1.38	.53	.79	536.80			
76	3	51	76	114	140	61,9	77,8	106,4	42,9	40	17,5	26	367,4	M16x50	M12	BFX-308-BAS-306-W1
		2.01	2.99	4.49	5.51	2.44	3.06	4.19	1.69	1.57	.69	1.02	808.28			
76	3	64	76	114	140	61,9	88,9	106,4	50,8	40	17,5	26	367,0	M16x50	M12	BFX-308-BAS-307-W1
		2.52	2.99	4.49	5.51	2.44	3.50	4.19	2.00	1.57	.69	1.02	807.40			

Please see Page 89 for separate Bolt Sets and Sealings.

6000 PSI High Pressure Series (based on ISO 6162-2:2012)

Nominal Size DN	(in)	Dimensions (mm/in) ØA	ØA1	F	G	H	H1	I	I1	L	ØK	ØK1	Weight (kg/lbs) ca. per 100	for Bolts Metric	Ø Thread Metric	Ordering Codes
19	3/4	19	19	70	70	23,8	50,8	50,8	23,8	28	11	18	83,0	M10x35	M10	BFX-602-BAS-602-W1
		.75	.75	2.76	2.76	.94	2.00	2.00	.94	1.10	.43	.71	182.60			
25	1	19	23	70	81	27,8	50,8	57,2	23,8	30	13,5	20	100,9	M12x40	M10	BFX-603-BAS-602-W1
		.75	.91	2.76	3.19	1.09	2.00	2.25	.94	1.18	.53	.79	221.98			
25	1	25	25	75	80	27,8	57,2	57,2	27,8	36	13,5	20	125,0	M12x45	M12	BFX-603-BAS-603-W1
		.98	.98	2.95	3.15	1.09	2.25	2.25	1.09	1.42	.53	.79	275.00			
32	1-1/4	23	30	83	100	31,8	57,2	66,6	27,8	25	15	22	120,7	M14x40	M12	BFX-604-M14-BAS-603-W1
		.91	1.18	3.27	3.94	1.25	2.25	2.62	1.09	.98	.59	.87	265.54			
32	1-1/4	31	31	90	100	31,8	66,6	66,6	31,8	35	15	22	195,0	M14x50	M14	BFX-604-M14-BAS-604-M14-W1
		1.22	1.22	3.54	3.94	1.25	2.62	2.62	1.25	1.38	.59	.87	429.00			
38	1-1/2	32	40	95	113	36,5	66,6	79,3	31,8	48	17,5	26	236,2	M16x55	M14	BFX-605-BAS-604-M14-W1
		1.26	1.57	3.74	4.45	1.44	2.62	3.12	1.25	1.89	.69	1.02	519.64			
38	1-1/2	38	38	113	113	36,5	79,3	79,3	36,5	50	17,5	26	382,2	M16x55	M16	BFX-605-BAS-605-W1
		1.50	1.50	4.45	4.45	1.44	3.12	3.12	1.44	1.97	.69	1.02	840.84			
51	2	38	49	125	140	44,5	79,3	96,8	36,5	60	22	33	334,9	M20x100	M16	BFX-606-BAS-605-W1
		1.50	1.93	4.92	5.51	1.75	3.12	3.81	1.44	2.36	.87	1.30	736.78			

Please see Page 89 for separate Bolt Sets and Sealings.

Materials / Ordering Options / Examples

* SAE Reducing Flange (without O-ring) made of Steel S355J2 or equivalent, blank (oiled) **BFX-...-BAS-...-W1**
* SAE Reducing Flange (without O-ring) made of Stainless Steel V4A – 1.4404 (on request) **BFX-...-BAS-...-W5**

Separate Bolt Sets and Sealings

Please see Page 89 for separate Bolt Sets and Sealings.

D

Bolt Sets

Ordering of bolt sets (consisting of 4 hexagon socket head cap bolts and 4 spring rings) by using the ordering codes as stated below:

Metric bolts (property class 10.9)	**KIT-BFX-IS-M12x50-ISO4762-10.9-W1**	(Steel, blank and oiled)
UNC bolts (Grade 8)	**KIT-BFX-IS-U5/16-18X1-1/4-AB18.3-GR8-W1**	(Steel, blank and oiled)

Thread diameters, dimensions (see corresponding catalogue pages) and property classes / grades have to be chosen to meet your specific requirements.
Replace material code W66 / W1 with W5 for bolts made of Stainless Steel V4A – 1.4571.

Metric bolts	ISO 4762	Spring rings for Metric bolts	DIN 7980
UNC bolts	ANSI B 18.3	Spring rings for UNC bolts	ANSI B 18.21.1

O Rings

3000 PSI Standard Pressure Series (according to ISO 6162-1)

Nominal Size DN	(in)	Internal Diameter x Cross-Section SAE J515 (STAUFF Standard)	Nominal Size ISO 3601-1
13	1/2	18.64 x 3.53	-210
19	3/4	24.99 x 3.53	-214
25	1	32.92 x 3.53	-219
32	1-1/4	37.69 x 3.53	-222
38	1-1/2	47.22 x 3.53	-225
51	2	56.74 x 3.53	-228
64	2-1/2	69.44 x 3.53	-232
76	3	85.32 x 3.53	-237
89	3-1/2	98.02 x 3.53	-241
102	4	110.72 x 3.53	-245
127	5	136.12 x 3.53	-253

6000 PSI High Pressure Series (according to ISO 6162-2)

Nominal Size DN	(in)	Internal Diameter x Cross-Section SAE J515 (STAUFF Standard)	Nominal Size ISO 3601-1
13	1/2	18.64 x 3.53	-210
19	3/4	24.99 x 3.53	-214
25	1	32.92 x 3.53	-219
32	1-1/4	37.69 x 3.53	-222
38	1-1/2	47.22 x 3.53	-225
51	2	56.74 x 3.53	-228
64	2-1/2	69.44 x 3.53	-232
76	3	85.32 x 3.53	-237

Ordering Codes

***O-RING-*18.64X*3.53-*B90**

* O-Ring		**O-RING**
* Internal Diameter (in mm)		**18.64**
* Cross-Section (in mm)		**3.53**
* Seal Material	NBR (Buna-N®) Hardness: 90 Shore Temperature Range: -30 °C ... +100 °C / -22 °F ... + 212 °F	**-B90**
	FKM (Viton®) Hardness: 85 ... 90 Shore Temperature Range: -20 °C ... +200 °C / -4 °F ... +392 °F	**-V90**

Please contact STAUFF for alternative materials.

SAE Block T-Connection (Adaptor Style) 92

BF-T

SAE Block T-Connection (Connector Style) 93

BC-T

SAE Block L-Connection (Adaptor Style) 94

BF-L

SAE Block L-Connection (Connector Style) 95

BC-L

SAE Block L-Connection Reduction (Adaptor Style) 96

BF-L

E

SAE Block T-Connection (Adaptor Style)
Type BF-T ▪ 6000 PSI Series

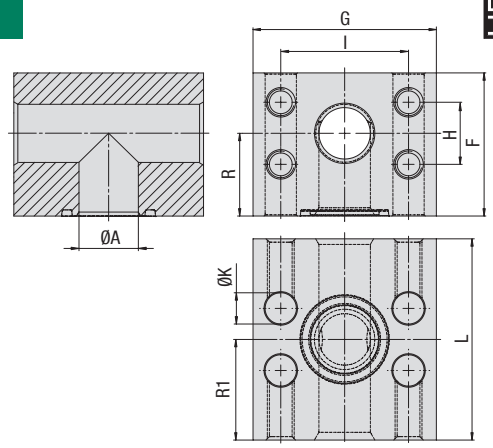

6000 PSI High Pressure Series (based on ISO 6162-2:2012)

Nominal Size DN	(in)	PN[1] Bolts (bar/PSI) 10.9	Dimensions (mm/in) ØA	F	G	H	I	L	R	R1	ØK	Weight (kg/lbs) ca. per 100	Ø Thread Metric	Ordering Codes
19	3/4	420	19	55	72	23,8	50,8	72	32	36	11	176,0	M10	BF-T-602-W66
		6090	.75	2.17	2.83	.94	2.00	2.83	1.26	1.42	.43	387.20		
25	1	420	23	64	82	27,8	57,2	90	37	45	13,5	283,0	M12	BF-T-603-W66
		6090	.91	2.52	3.23	1.09	2.25	3.54	1.46	1.77	.53	622.60		
32	1-1/4	420	30	72	100	31,8	66,6	100	41	50	15,5	404,7	M14	BF-T-604-M14-W66
		6090	1.18	2.83	3.94	1.25	2.62	3.94	1.61	1.97	.61	890.34		
38	1-1/2	420	38	89	114	36,5	79,3	110	50	55	17,5	645,1	M16	BF-T-605-W66
		6090	1.50	3.50	4.49	1.44	3.12	4.33	1.97	2.17	.69	1419.22		
51	2	420	50	107	133	44,5	96,8	135	64	67,5	22	1027,5	M20	BF-T-606-W66
		6090	1.97	4.21	5.24	1.75	3.81	5.31	2.52	2.66	.87	2260.50		

Please see Page 89 for separate Bolt Sets and Sealings.

Materials / Ordering Options / Examples

* SAE Flange Block made of Steel S355J2 / C45 or equivalent, zinc-plated and thick-film-passivated **BF-T-...-W66**

* SAE Flange Block made of Steel S355J2 / C45 or equivalent, blank (oiled) (on request) **BF-T-...-W1**
* SAE Flange Block made of Steel S355J2 / C45 or equivalent, zinc/nickel-plated (on request) **BF-T-...-W3**
* SAE Flange Block made of Stainless Steel V4A – 1.4404 (on request) **BF-T-...-W5**

* Size of Metric tapped holes deviating from the standard (e.g. M14) **BF-T-...-M14-W66**

[1] The maximum working pressure PN (bar/PSI) applies only to the flange itself and depends on the bolts used (Grade 10.9).

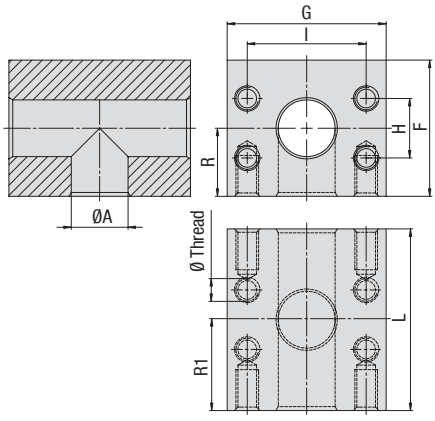

SAE Block T-Connection (Connector Style)
Type BC-T ▪ 3000 / 6000 PSI Series

3000 PSI Standard Pressure Series (based on ISO 6162-1:2012)

Nominal Size DN	(in)	PN[1] Bolts (bar/PSI) 10.9	Dimensions (mm/in) ØA	F	G	H	I	L	R	R1	Weight (kg/lbs) ca. per 100	Ø Thread Metric	Ordering Codes
13	1/2	350	13	50	55	17,5	38,1	70	25	35	138,3	M8	BC-T-301-W66
		5075	.51	1.97	2.17	.69	1.50	2.76	.98	1.38	304.26		
19	3/4	350	19	60	65	22,3	47,6	75	30	37,5	188,9	M10	BC-T-302-W66
		5075	.75	2.36	2.56	.88	1.87	2.95	1.18	1.48	415.58		
25	1	320	24	65	72	26,2	52,4	80	33	40	245,4	M10	BC-T-303-W66
		4641	.94	2.56	2.83	1.03	2.06	3.15	1.30	1.57	539.88		
32	1-1/4	280	32	80	82	30,2	58,7	90	39	45	368,7	M10	BC-T-304-W66
		4061	1.26	3.15	3.23	1.19	2.31	3.54	1.54	1.77	811.14		
38	1-1/2	210	38	92	100	35,7	69,9	110	51	55	641,5	M12	BC-T-305-W66
		3045	1.50	3.62	3.94	1.41	2.75	4.33	2.01	2.17	1411.30		
51	2	210	51	87	102	42,9	77,8	120	51	60	564,9	M12	BC-T-306-W66
		3045	2.01	3.43	4.02	1.69	3.06	4.72	2.01	2.36	1242.69		
64	2-1/2	175	62	120	115	50,8	88,9	160	60	80	1269,8	M12	BC-T-307-W66
		2538	2.44	4.72	4.53	2.00	3.50	6.30	2.36	3.15	2793.56		
76	3	138	73	135	135	61,9	106,4	160	67,5	80	1596,1	M16	BC-T-308-W66
		2001	2.87	5.31	5.31	2.44	4.19	6.30	2.66	3.15	3511.42		
89	3-1/2	35	89	145	150	69,9	120,7	160	72,5	80	1734,9	M16	BC-T-309-W66
		508	3.50	5.71	5.91	2.75	4.75	6.30	2.85	3.15	3816.78		

Please see Page 89 for separate Bolt Sets and Sealings.

6000 PSI High Pressure Series (based on ISO 6162-2:2012)

Nominal Size DN	(in)	PN[1] Bolts (bar/PSI) 10.9	Dimensions (mm/in) ØA	F	G	H	I	L	R	R1	Weight (kg/lbs) ca. per 100	Ø Thread Metric	Ordering Codes
13	1/2	420	13	50	60	18,2	40,5	90	25	45	194,2	M8	BC-T-601-W66
		6090	.51	1.97	2.36	.72	1.59	3.54	.98	1.77	427.24		
19	3/4	420	19	55	72	23,8	50,8	72	32	36	192,9	M10	BC-T-602-W66
		6090	.75	2.17	2.83	.94	2.00	2.83	1.26	1.42	424.38		
25	1	420	23	64	82	27,8	57,2	90	37	45	310,4	M12	BC-T-603-W66
		6090	.91	2.52	3.23	1.09	2.25	3.54	1.46	1.77	682.88		
32	1-1/4	420	30	72	100	31,8	66,6	100	41	50	300,6	M12	BC-T-604-W66
		6090	1.18	2.83	3.94	1.25	2.62	3.94	1.61	1.97	661.32		
32	1-1/4	420	30	72	100	31,8	66,6	100	41	50	300,6	M14	BC-T-604-M14-W66
		6090	1.18	2.83	3.94	1.25	2.62	3.94	1.61	1.97	661.32		
38	1-1/2	420	38	89	114	36,5	79,3	110	50	55	688,9	M16	BC-T-605-W66
		6090	1.50	3.50	4.49	1.44	3.12	4.33	1.97	2.17	1515.58		
51	2	420	50	107	133	44,5	96,8	135	64	67,5	1113,7	M20	BC-T-606-W66
		6090	1.97	4.21	5.24	1.75	3.81	5.31	2.52	2.66	2450.14		
64	2-1/2	420	62	155	180	58,8	123,8	180	77,5	90	1112,3	M24	BC-T-607-W1
		6090	2.44	6.10	7.09	2.31	4.87	7.09	3.05	3.54	2447.06		

Please see Page 89 for separate Bolt Sets and Sealings.

[1] The maximum working pressure PN (bar/PSI) applies only to the flange itself and depends on the bolts used (Grade 10.9).

Materials / Ordering Options / Examples

* SAE Flange Block made of Steel S355J2 / C45 or equivalent, zinc-plated and thick-film-passivated **BC-T-...-W66**

* SAE Flange Block made of Steel S355J2 / C45 or equivalent, blank (oiled) (on request) **BC-T-...-W1**
* SAE Flange Block made of Steel S355J2 / C45 or equivalent, zinc/nickel-plated (on request) **BC-T-...-W3**
* SAE Flange Block made of Stainless Steel V4A – 1.4404 (on request) **BC-T-...-W5**

* Size of Metric tapped holes deviating from the standard (e.g. M14) **BC-T-...-M14-W66**

SAE Block L-Connection (Adaptor Style)
Type BF-L ▪ 3000 / 6000 PSI Series

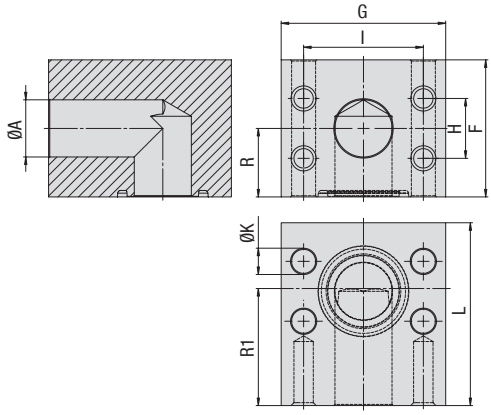

3000 PSI Standard Pressure Series (based on ISO 6162-1:2012)

Nominal Size DN	(in)	PN[1] Bolts (bar/PSI) 10.9	Dimensions (mm/in) ØA	F	G	H	I	L	R	R1	ØK	Weight (kg/lbs) ca. per 100	Ø Thread Metric	Ordering Codes
13	1/2	350	13	50	55	17,5	38,1	55	25	35	9	103,3	M8	BF-L-301-W66
		5075	.51	1.97	2.17	.69	1.50	2.17	.98	1.38	.35	227.26		
20	3/4	350	19	60	65	22,3	47,6	60	30	40	11	146,7	M10	BF-L-302-W66
		5075	.75	2.36	2.56	.88	1.87	2.36	1.18	1.57	.43	322.74		
25	1	320	24	65	72	26,2	52,4	65	33	40	11	189,7	M10	BF-L-303-W66
		4641	.94	2.56	2.83	1.03	2.06	2.56	1.30	1.57	.43	417.34		
32	1-1/4	280	32	80	82	30,2	58,7	82	39	38	11	349,3	M10	BF-L-304-W66
		4061	1.26	3.15	3.23	1.19	2.31	3.23	1.54	1.50	.43	768.46		
38	1-1/2	210	38	92	100	35,7	69,9	92	51	59	13,5	510,9	M12	BF-L-305-W66
		3045	1.50	3.62	3.94	1.41	2.75	3.62	2.01	2.32	.53	1123.98		
51	2	210	51	87	102	42,9	77,8	85	51	48	13,5	376,0	M12	BF-L-306-W66
		3045	2.01	3.43	4.02	1.69	3.06	3.35	2.01	1.89	.53	827.20		
64	2-1/2	175	62	120	110	50,8	88,9	110	60	65	13,5	842,5	M12	BF-L-307-W66
		2538	2.44	4.72	4.33	2.00	3.50	4.33	2.36	2.56	.53	1853.50		
76	3	138	73	135	135	61,9	106,4	150	67,5	90	17,5	1481,7	M16	BF-L-308-W66
		2001	2.87	5.31	5.31	2.44	4.19	5.91	2.66	3.54	.69	3259.74		
89	3-1/2	35	89	145	150	69,9	120,7	145	72,5	75	17,5	1653,6	M16	BF-L-309-W66
		508	3.50	5.71	5.91	2.75	4.75	5.71	2.85	2.95	.69	3637.92		

Please see Page 89 for separate Bolt Sets and Sealings.

6000 PSI High Pressure Series (based on ISO 6162-2:2012)

Nominal Size DN	(in)	PN[1] Bolts (bar/PSI) 10.9	Dimensions (mm/in) ØA	F	G	H	I	L	R	R1	ØK	Weight (kg/lbs) ca. per 100	Ø Thread Metric	Ordering Codes
13	1/2	420	13	50	60	18,2	40,5	60	25	40	9	122,9	M8	BF-L-601-W66
		6090	.51	1.97	2.36	.72	1.59	2.36	.98	1.57	.35	270.38		
19	3/4	420	19	55	72	23,8	50,8	60	32	36	11	149,5	M10	BF-L-602-W66
		6090	.75	2.17	2.83	.94	2.00	2.36	1.26	1.42	.43	328.90		
25	1	420	23	64	82	27,8	57,2	68	37	40	13,5	210,3	M12	BF-L-603-W66
		6090	.91	2.52	3.23	1.09	2.25	2.68	1.46	1.57	.53	462.66		
32	1-1/4	420	30	72	100	31,8	66,6	76	41	46	13,5	348,5	M12	BF-L-604-W66
		6090	1.18	2.83	3.94	1.25	2.62	2.99	1.61	1.81	.53	766.70		
32	1-1/4	420	30	72	100	31,8	66,6	76	41	46	15,5	322,9	M14	BF-L-604-M14-W66
		6090	1.18	2.83	3.94	1.25	2.62	2.99	1.61	1.81	.61	710.38		
38	1-1/2	420	38	89	114	36,5	79,3	86	50	52	17,5	494,1	M16	BF-L-605-W66
		6090	1.50	3.50	4.49	1.44	3.12	3.39	1.97	2.05	.69	1086.91		
51	2	420	50	107	133	44,5	96,8	107	64	70	22	816,8	M20	BF-L-606-W66
		6090	1.97	4.21	5.24	1.75	3.81	4.21	2.52	2.76	.87	1796.96		
64	2-1/2	420	62	155	180	58,8	123,8	160	77,5	90	26	829,6	M24	BF-L-607-W1
		6090	2.44	6.10	7.09	2.31	4.87	6.30	3.05	3.54	1.02	1825.12		

Please see Page 89 for separate Bolt Sets and Sealings.

Materials / Ordering Options / Examples

* SAE Flange Block made of Steel S355J2 / C45 or equivalent, zinc-plated and thick-film-passivated **BF-L-...-W66**

* SAE Flange Block made of Steel S355J2 / C45 or equivalent, blank (oiled) (on request) **BF-L-...-W1**
* SAE Flange Block made of Steel S355J2 / C45 or equivalent, zinc/nickel-plated (on request) **BF-L-...-W3**
* SAE Flange Block made of Stainless Steel V4A – 1.4404 (on request) **BF-L-...-W5**

* Size of Metric tapped holes deviating from the standard (e.g. M14) **BF-L-...-M14-W66**

[1] The maximum working pressure PN (bar/PSI) applies only to the flange itself and depends on the bolts used (Grade 10.9).

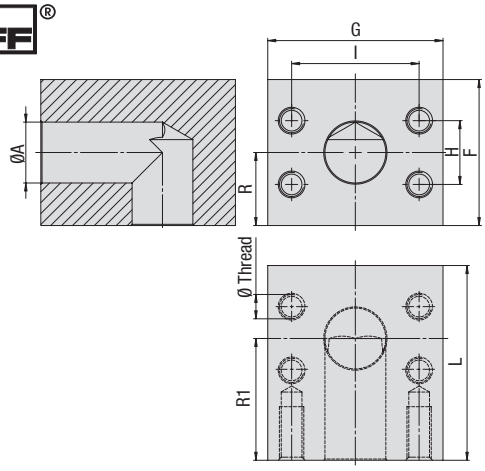

SAE Block L-Connection (Connector Style)
Type BC-L ▪ 3000 / 6000 PSI Series

3000 PSI Standard Pressure Series (based on ISO 6162-1:2012)

Nominal Size DN	(in)	PN[1] Bolts (bar/PSI) 10.9	Dimensions (mm/in) ØA	F	G	H	I	L	R	R1	Weight (kg/lbs) ca. per 100	Ø Thread Metric	Ordering Codes
13	1/2	350	13	50	55	17,5	38,1	55	25	35	109,1	M8	BC-L-301-W66
		5075	.51	1.97	2.17	.69	1.50	2.17	.98	1.38	240.02		
20	3/4	350	19	60	65	22,3	47,6	60	30	40	157,9	M10	BC-L-302-W66
		5075	.75	2.36	2.56	.88	1.87	2.36	1.18	1.57	347.38		
25	1	320	24	65	72	26,2	52,4	65	33	40	204,3	M10	BC-L-303-W66
		4641	.94	2.56	2.83	1.03	2.06	2.56	1.30	1.57	449.46		
32	1-1/4	280	32	80	82	30,2	58,7	82	39	38	366,7	M10	BC-L-304-W66
		4061	1.26	3.15	3.23	1.19	2.31	3.23	1.54	1.50	806.74		
38	1-1/2	210	38	92	100	35,7	69,9	92	51	59	547,1	M12	BC-L-305-W66
		3045	1.50	3.62	3.94	1.41	2.75	3.62	2.01	2.32	1203.62		
51	2	210	51	87	102	42,9	77,8	85	51	48	403,4	M12	BC-L-306-W66
		3045	2.01	3.43	4.02	1.69	3.06	3.35	2.01	1.89	887.48		
64	2-1/2	175	62	120	110	50,8	88,9	110	60	65	966,5	M12	BC-L-307-W66
		2538	2.44	4.72	4.33	2.00	3.50	4.33	2.36	2.56	2126.30		
76	3	138	73	135	135	61,9	106,4	150	67,5	90	1629,3	M16	BC-L-308-W66
		2001	2.87	5.31	5.31	2.44	4.19	5.91	2.66	3.54	3584.46		
89	3-1/2	35	89	145	150	69,9	120,7	145	72,5	75	1744,7	M16	BC-L-309-W66
		508	3.50	5.71	5.91	2.75	4.75	5.71	2.85	2.95	3838.34		

6000 PSI High Pressure Series (based on ISO 6162-2:2012)

Nominal Size DN	(in)	PN[1] Bolts (bar/PSI) 10.9	Dimensions (mm/in) ØA	F	G	H	I	L	R	R1	Weight (kg/lbs) ca. per 100	Ø Thread Metric	Ordering Codes
13	1/2	420	13	50	60	18,2	40,5	60	25	40	130,0	M8	BC-L-601-W66
		6090	.51	1.97	2.36	.72	1.59	2.36	.98	1.57	286.00		
19	3/4	420	19	55	72	23,8	50,8	60	32	36	161,9	M10	BC-L-602-W66
		6090	.75	2.17	2.83	.94	2.00	2.36	1.26	1.42	356.18		
25	1	420	23	64	82	27,8	57,2	68	37	40	238,9	M12	BC-L-603-W66
		6090	.91	2.52	3.23	1.09	2.25	2.68	1.46	1.57	525.58		
32	1-1/4	420	30	72	100	31,8	66,6	76	41	46	233,4	M12	BC-L-604-W66
		6090	1.18	2.83	3.94	1.25	2.62	2.99	1.61	1.81	513.48		
32	1-1/4	420	30	72	100	31,8	66,6	76	41	46	233,4	M14	BC-L-604-M14-W66
		6090	1.18	2.83	3.94	1.25	2.62	2.99	1.61	1.81	513.48		
38	1-1/2	420	38	89	114	36,5	79,3	86	50	52	558,1	M16	BC-L-605-W66
		6090	1.50	3.50	4.49	1.44	3.12	3.39	1.97	2.05	1227.82		
51	2	420	50	107	133	44,5	96,8	107	64	70	894,4	M20	BC-L-606-W66
		6090	1.97	4.21	5.24	1.75	3.81	4.21	2.52	2.76	1967.68		
64	2-1/2	420	62	155	180	58,8	123,8	160	77,5	90	911,1	M24	BC-L-607-W1
		6090	2.44	6.10	7.09	2.31	4.87	6.30	3.05	3.54	2004.42		

[1] The maximum working pressure PN (bar/PSI) applies only to the flange itself and depends on the bolts used (Grade 10.9).

Materials / Ordering Options / Examples

* SAE Flange Block made of Steel S355J2 / C45 or equivalent, zinc-plated and thick-film-passivated **BC-L-...-W66**

* SAE Flange Block made of Steel S355J2 / C45 or equivalent, blank (oiled) (on request) **BC-L-...-W1**
* SAE Flange Block made of Steel S355J2 / C45 or equivalent, zinc/nickel-plated (on request) **BC-L-...-W3**
* SAE Flange Block made of Stainless Steel V4A – 1.4404 (on request) **BC-L-...-W5**

* Size of Metric tapped holes deviating from the standard (e.g. M14) **BC-L-...-M14-W66**

SAE Block L-Connection Reduction (Adaptor Style)
Type BF-L ▪ 6000 PSI Series

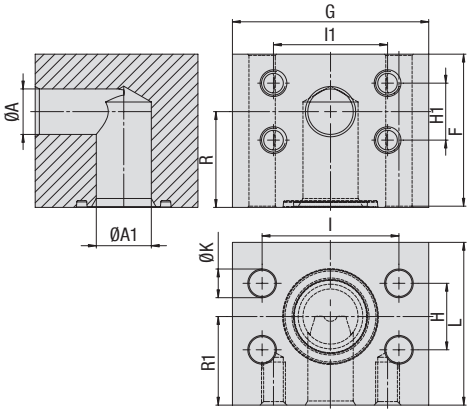

6000 PSI High Pressure Series (based on ISO 6162-2:2012)

Nominal Size		PN[1] Bolts (bar/PSI)	Dimensions (mm/in)												Weight (kg/lbs) ca.	Ø Thread	Ordering Codes
DN	(in)	10.9	ØA	ØA1	F	G	H	H1	I1	I	L	R	R1	ØK	per 100	Metric	
25 - 19	1 - 3/4	420	19	23	64	82	27,8	23,8	50,8	57,2	68	37	40	14	223,0	M10	**BF-L-603-602-W66**
		6090	.75	.91	2.52	3.23	1.09	.94	2.00	2.25	2.68	1.46	1.57	.55	490.60		
32 - 19	1-1/4 - 3/4	420	19	30	72	100	31,8	23,8	50,8	66,6	76	41	46	16	345,4	M10	**BF-L-604-M14-602-W66**
		6090	.75	1.18	2.83	3.94	1.25	.94	2.00	2.62	2.99	1.61	1.81	.63	759.88		
32 - 25	1-1/4 - 1	420	23	30	72	100	31,8	27,8	57,2	66,6	76	41	46	16	333,2	M12	**BF-L-604-M14-603-W66**
		6090	.91	1.18	2.83	3.94	1.25	1.09	2.25	2.62	2.99	1.61	1.81	.63	733.04		
38 - 32	1-1/2 - 1-1/4	420	30	38	89	114	36,5	31,8	66,6	79,3	86	50	52	18	541,3	M14	**BF-L-605-604-M14-W66**
		6090	1.18	1.50	3.50	4.49	1.44	1.25	2.62	3.12	3.39	1.97	2.05	.71	1190.86		
51 - 38	2 - 1-1/2	420	38	50	107	133	44,5	36,5	79,3	96,8	107	64	70	22	893,5	M16	**BF-L-606-605-W66**
		6090	1.50	1.97	4.21	5.24	1.75	1.44	3.12	3.81	4.21	2.52	2.76	.87	1965.70		

Please see Page 89 for separate Bolt Sets and Sealings.

Materials / Ordering Options / Examples

* SAE Flange Block made of Steel S355J2 / C45 or equivalent, zinc-plated and thick-film-passivated **BF-L-...-...-W66**

* SAE Flange Block made of Steel S355J2 / C45 or equivalent, blank (oiled) (on request) **BF-L-...-...-W1**
* SAE Flange Block made of Steel S355J2 / C45 or equivalent, zinc/nickel-plated (on request) **BF-L-...-...-W3**
* SAE Flange Block made of Stainless Steel V4A – 1.4404 (on request) **BF-L-...-...-W5**

* Size of Metric tapped holes deviating from the standard (e.g. M14) **BF-L-...-M14-...-W66**
* Size of through holes deviating from the standard (e.g. for bolts M14) **BF-L-...-...-M14-W66**

[1] The maximum working pressure PN (bar/PSI) applies only to the flange itself and depends on the bolts used (Grade 10.9).

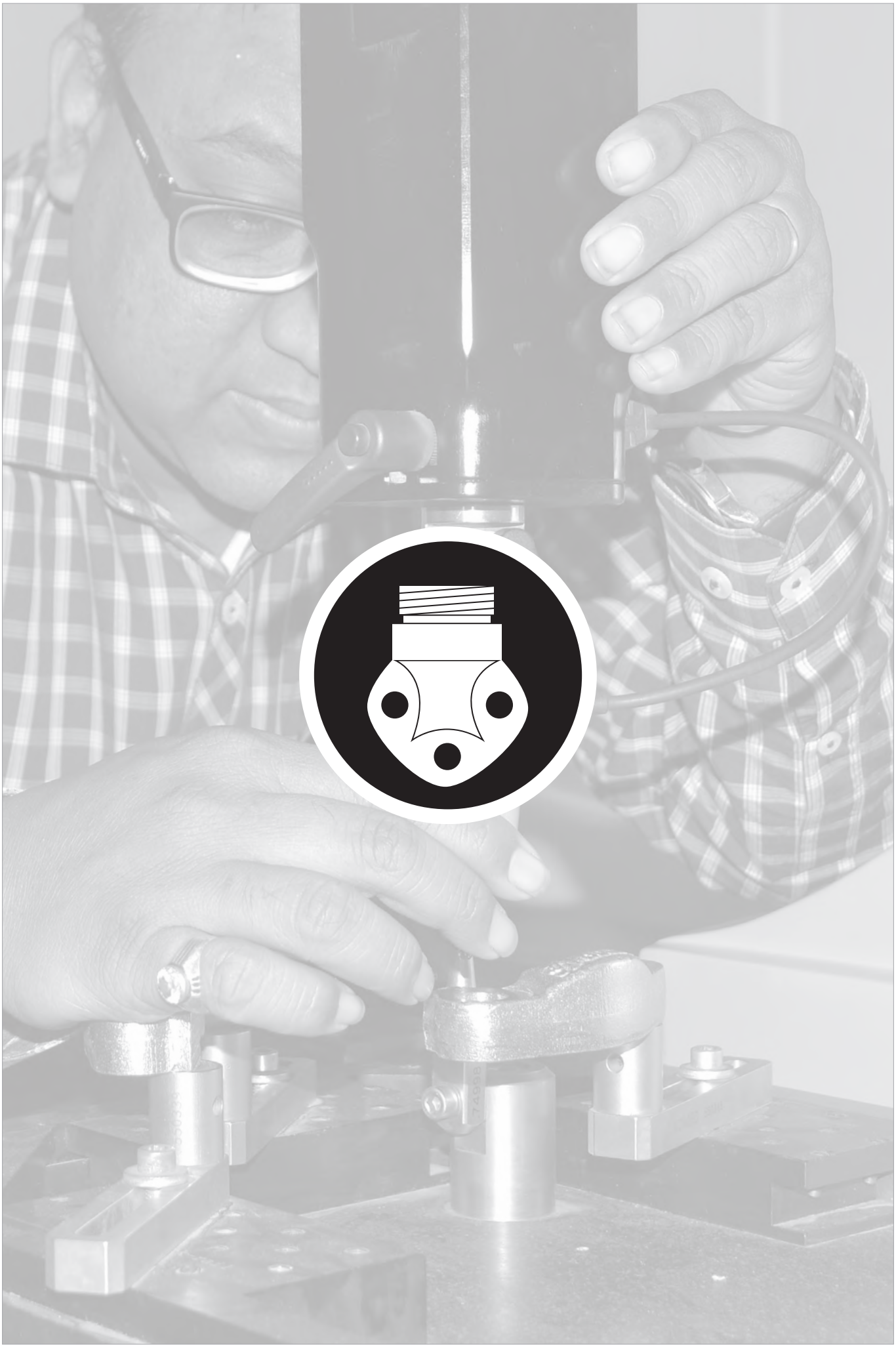

4-Hole Flange with Male Metric Thread and 24° Conical Bore (Shape W acc. to DIN 3861)
GP-LK-L/S — **100**

4-Hole 90° Flange with Male Metric Thread and 24° Conical Bore (Shape W acc. to DIN 3861)
WP-3-LK-L/S — **101**

3-Hole 90° Flange with Male Metric Thread and 24° Conical Bore (Shape W acc. to DIN 3861)
WP-3-LK-L/S — **102**

3-Hole 90° Flange with Female BSPP Thread
WP-3-LK-G — **103**

4-Hole 90° Flange with Female BSPP Thread
WP-LK-G — **104**

3-Hole 90° Flange with Female BSPP Thread (Aluminium)
WP-3-LK-G-W50 — **105**

4-Hole 90° Flange with Female BSPP Thread (Aluminium)
WP-LK-G-W50 — **106**

4-Hole Flange with Female BSPP Thread (Flat Style)
GP-FL-LK-G — **107**

4-Hole Butt-Weld Flange
GP-LK-ST — **108**

4-Hole Flange with Male BSPP Thread and 60° Conical Bore (acc. to BS 5200)
GP-LK-B — **109**

4-Hole Flange with Female BSPP Thread
GP-LK-G — **110**

F

4-Hole Flange with Male Metric Thread and 24° Conical Bore (acc. to ISO 8434-1) Type GP-LK-L/S

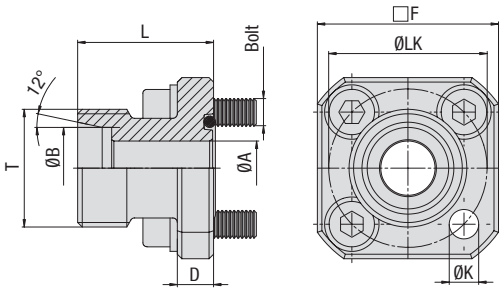

PN[1] (bar/PSI) 8.8	Dimensions (mm/in) ØLK	ØA	ØB	Series	D	F	L	T (Metric)	ØK	Weight (kg/lbs) ca. per 100	Bolts Metric	O-ring	Ordering Codes
315	35	7	10	L	8	40	30	16x1,5	6,5	13,1	4 x M6x22	20x2,5	GP-LK35-10L-W3-K
4568	1.38	.28	.39		.31	1.57	1.18		.26	28.82			
315	35	9	12	L	8	40	30	18x1,5	6,5	13,5	4 x M6x22	20x2,5	GP-LK35-12L-W3-K
4568	1.38	.35	.47		.31	1.57	1.18		.26	29.70			
250	35	11	15	L	8	40	30	22x1,5	6,5	14,8	4 x M6x22	20x2,5	GP-LK35-15L-W3-K
3625	1.38	.43	.59		.31	1.57	1.18		.26	32.56			
250	35	12	18	L	8	40	30	26x1,5	6,5	15,3	4 x M6x22	20x2,5	GP-LK35-18L-W3-K
3625	1.38	.47	.71		.31	1.57	1.18		.26	33.66			
315	35	12	16	S	8	40	30	24x1,5	6,5	14,5	4 x M6x22	20x2,5	GP-LK35-16S-W3-K
4568	1.38	.47	.63		.31	1.57	1.18		.26	31.90			
100	40	11	15	L	8	40	35	22x1,5	6,5	15,7	4 x M6x22	26x2,5	GP-LK40-15L-W3-K
1450	1.57	.43	.59		.31	1.57	1.38		.26	34.54			
100	40	14	18	L	8	40	35	26x1,5	6,5	16,8	4 x M6x22	26x2,5	GP-LK40-18L-W3-K
1450	1.57	.55	.71		.31	1.57	1.38		.26	36.96			
100	40	18	22	L	8	40	35	30x2	6,5	16,3	4 x M6x22	26x2,5	GP-LK40-22L-W3-K
1450	1.57	.71	.87		.31	1.57	1.38		.26	35.86			
100	40	19	28	L	8	40	35	36x2	6,5	18,0	4 x M6x22	26x2,5	GP-LK40-28L-W3-K
1450	1.57	.75	1.10		.31	1.57	1.38		.26	39.60			
100	55	25	28	L	12	55	35	36x2	8,5	34,3	4 x M8x25	32x2,5	GP-LK55-28L-W3-K
1450	2.17	.98	1.10		.47	2.17	1.38		.33	75.46			
100	55	25	35	L	12	55	50	45x2	8,5	50,2	4 x M8x25	32x2,5	GP-LK55-35L-W3-K
1450	2.17	.98	1.38		.47	2.17	1.97		.33	110.44			
250	55	16	20	S	12	55	35	30x2	8,5	42,9	4 x M8x25	32x2,5	GP-LK55-20S-W3-K
3625	2.17	.63	.79		.47	2.17	1.38		.33	94.38			

Materials / Ordering Options / Examples

* Kit with 4-Hole Flange made of Steel S355J2 or equivalent, zinc/nickel-plated including Metric bolts 10.9, spring rings, O-ring made of NBR (Buna-N®) **GP-LK...-...-W3-K**

Please always indicate ØLK, ØB and Series.

[1] The maximum working pressure PN (bar/PSI) applies only to the flange itself. The actual maximum working pressure depends on the thickness and the quality of the tube used.

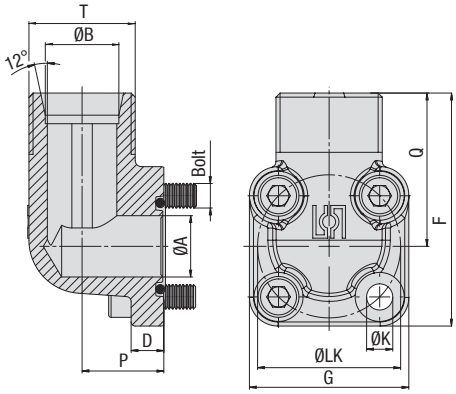

4-Hole 90° Flange with Male Metric Thread and 24° Conical Bore (acc. to ISO 8434-1) Type WP-LK-L/S

PN[1] (bar/PSI) 8.8	Dimensions (mm/in) ØLK	ØA	ØB	Series	D	F	G	P	Q	T (Metric)	ØK	Weight (kg/lbs) ca. per 100	Bolts Metric	O-ring	Ordering Codes
315	35	14	10	L	8	57	39	16,5	37,5	16x1,5	6,4	18,4	2 x M6x22	20x2,5	**WP-LK35-10L-W3-K**
4568	1.38	.55	.39		.31	2.24	1.54	.65	1.48		.25	40.48	2 x M6x35		
315	35	14	12	L	8	57	39	16,5	37,5	18x1,5	6,4	19,2	2 x M6x22	20x2,5	**WP-LK35-12L-W3-K**
4568	1.38	.55	.47		.31	2.24	1.54	.65	1.48		.25	42.24	2 x M6x35		
250	35	14	15	L	8	56,5	39	16,5	37,5	22x1,5	6,4	20,2	2 x M6x22	20x2,5	**WP-LK35-15L-W3-K**
3625	1.38	.55	.59		.31	2.22	1.54	.65	1.48		.25	44.44	2 x M6x35		
250	35	15	18	L	8	57	39	20	37,5	26x1,5	6,4	22,0	2 x M6x22	20x2,5	**WP-LK35-18L-W3-K**
3625	1.38	.59	.71		.31	2.24	1.54	.79	1.48		.25	48.40	2 x M6x40		
315	35	15	16	S	8	57,5	39	20	38	24x1,5	6,4	25,3	2 x M6x22	20x2,5	**WP-LK35-16S-W3-K**
4568	1.38	.59	.63		.31	2.26	1.54	.79	1.50		.25	55.66	2 x M6x40		
315	35	15	20	S	8	64,5	39	25	45	30x2	6,4	30,3	2 x M6x22	20x2,5	**WP-LK35-20S-W3-K**
4568	1.38	.59	.79		.31	2.54	1.54	.98	1.77		.25	66.66	2 x M6x45		
100	40	20	15	L	9	58	42	22,5	37	22x1,5	6,4	26,0	4 x M6x22	26x2,5	**WP-LK40-15L-W3-K**
1450	1.57	.79	.59		.35	2.28	1.65	.89	1.46		.25	57.14			
100	40	20	18	L	9	59	42	22,5	38	26x1,5	6,4	26,8	4 x M6x22	26x2,5	**WP-LK40-18L-W3-K**
1450	1.57	.79	.71		.35	2.32	1.65	.89	1.50		.25	58.96			
100	40	20	22	L	9	59	42	22,5	38	30x2	6,4	26,7	4 x M6x22	26x2,5	**WP-LK40-22L-W3-K**
1450	1.57	.79	.87		.35	2.32	1.65	.89	1.50		.25	58.84			
100	40	20	28	L	9	61	42	28	40	36x2	6,4	36,9	2 x M6x22	26x2,5	**WP-LK40-28L-W3-K**
1450	1.57	.79	1.10		.35	2.40	1.65	1.10	1.57		.25	81.27	2 x M6x50		
100	40	20	35	L	9	62	42	34	41	45x2	6,4	40,6	2 x M6x22	26x2,5	**WP-LK40-35L-W3-K**
1450	1.57	.79	1.38		.35	2.44	1.65	1.34	1.61		.25	89.32	2 x M6x60		
250	40	20	20	S	9	61	42	22,5	40	30x2	6,4	25,9	2 x M6x22	26x2,5	**WP-LK40-20S-W3-K**
3625	1.57	.79	.79		.35	2.40	1.65	.89	1.57		.25	56.98	2 x M6x45		
100	55	26,5	35	L	12	78	58	32	49	45x2	8,4	76,6	2 x M8x25	32x2,5	**WP-LK55-35L-W3-K**
1450	2.17	1.04	1.38		.47	3.07	2.28	1.26	1.93		.33	168.52	2 x M8x60		
100	55	26,5	42	L	12	78	58	40	49	52x2	8,4	103,6	2 x M8x25	32x2,5	**WP-LK55-42L-W3-K**
1450	2.17	1.04	1.65		.47	3.07	2.28	1.57	1.93		.33	227.88	2 x M8x70		
250	55	18,2	20	S	13	69	58	24	45	30x2	8,4	61,7	2 x M8x25	32x2,5	**WP-LK55-20S-W3-K**
3625	2.17	.72	.79		.51	2.72	2.28	.94	1.77		.33	135.70	2 x M8x50		
250	55	26,5	25	S	13	78	58	30	49	36x2	8,4	62,0	2 x M8x25	32x2,5	**WP-LK55-25S-W3-K**
3625	2.17	1.04	.98		.51	3.07	2.28	1.18	1.93		.33	136.40	2 x M8x55		
250	55	26,5	30	S	12	78	58	32	49	42x2	8,4	63,2	2 x M8x25	32x2,5	**WP-LK55-30S-W3-K**
3625	2.17	1.04	1.18		.47	3.07	2.28	1.26	1.93		.33	139.04	2 x M8x50		

[1] The maximum working pressure PN (bar/PSI) applies only to the flange itself. The actual maximum working pressure depends on the thickness and the quality of the tube used.

Materials / Ordering Options / Examples

* Kit with 4-Hole Flange made of Steel S355J2 or equivalent, zinc/nickel-plated including Metric bolts 10.9, spring rings, O-ring made of NBR (Buna-N®) **WP-LK...-...-W3-K**

Please always indicate ØLK, ØB and Series.

3-Hole 90° Flange with Male Metric Thread and 24° Conical Bore (acc. to ISO 8434-1) Type WP-3-LK-L/S

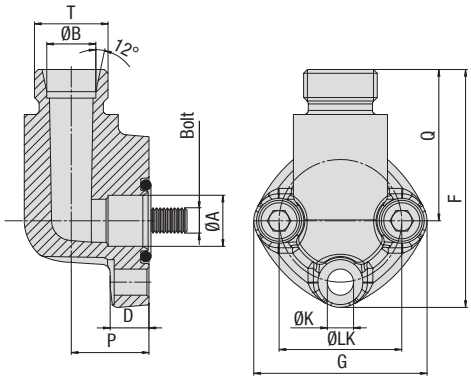

PN[1] (bar/PSI)	Dimensions (mm/in)											Weight (kg/lbs) ca.	Bolts	O-ring	Ordering Codes
8.8	ØLK	ØA	ØB		D	F	G	P	Q	T (Metric)	ØK	per 100	Metric		
250	30	12,5	12	L	9	58	42,5	19	37	18x1,5	6,4	17,7	3 x M6x25	16x2,5	**WP-3-LK30-12L-W3-K**
3625	1.18	.49	.47		.35	2.28	1.67	.75	1.46		.25	38.94			
250	30	12,5	15	L	9	58	42,5	19	37	22x1,5	6,4	19,5	3 x M6x25	16x2,5	**WP-3-LK30-15L-W3-K**
3625	1.18	.49	.59		.35	2.28	1.67	.75	1.46		.25	42.96			
160	40	19	22	L	13,5	70	54	25	43	30x2	8,4	40,4	3 x M8x30	24x2,5	**WP-3-LK40-22L-W3-K**
2320	1.57	.75	.87		.53	2.76	2.13	.98	1.69		.33	88.88			
160	40	19	28	L	13,5	70	54	25	43	36x2	8,4	35,7	3 x M8x30	24x2,5	**WP-3-LK40-28L-W3-K**
2320	1.57	.75	1.10		.53	2.76	2.13	.98	1.69		.33	78.54			

F

Materials / Ordering Options / Examples

* Kit with 3-Hole Flange made of Steel S355J2 or equivalent, zinc/nickel-plated including Metric bolts 10.9, spring rings, O-ring made of NBR (Buna-N®) **WP-3-LK...-...-W3-K**

Please always indicate ØLK, ØB and Series.

[1] The maximum working pressure PN (bar/PSI) applies only to the flange itself. The actual maximum working pressure depends on the thickness and the quality of the tube used.

3-Hole 90° Flange with Female BSPP Thread
Type WP-3-LK-G

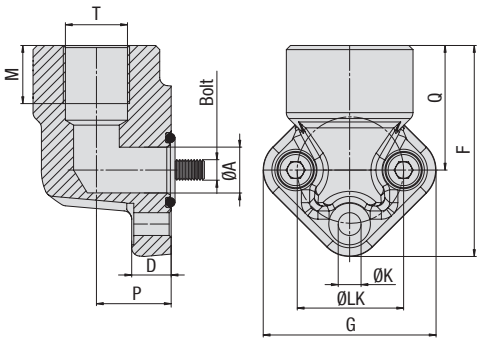

PN[1] (bar/PSI) 8.8	Dimensions (mm/in) ØLK	ØA	D	F	G	M	P	Q	T (BSPP)	ØK	Weight (kg/lbs) ca. per 100	Bolts Metric	O-ring	Ordering Codes
300	26	11,5	9,5	51	42	14	18	30	3/8 (06)	5,5	9,1	3 x M5x20	14x1,78	**WP-3-LK26-G06-W3-K**
4350	1.02	.45	.37	2.01	1.65	.55	.71	1.18		.22	20.02			
300	26	11,5	9,5	51	42	14	18	30	1/2 (08)	5,5	8,6	3 x M5x20	14x1,78	**WP-3-LK26-G08-W3-K**
4350	1.02	.45	.37	2.01	1.65	.55	.71	1.18		.22	18.92			
300	30	11,5	9,5	51	42	14	18	30	3/8 (06)	6,5	12,0	3 x M6x20	16x2,5	**WP-3-LK30-G06-W3-K**
4350	1.18	.45	.37	2.01	1.65	.55	.71	1.18		.26	26.40			
300	30	11,5	9,5	51	42	14	18	30	1/2 (08)	6,5	11,2	3 x M6x20	16x2,5	**WP-3-LK30-G08-W3-K**
4350	1.18	.45	.37	2.01	1.65	.55	.71	1.18		.26	24.64			
300	40	18	11,5	68	61	18	23	38	1/2 (08)	8,5	24,0	3 x M8x25	24x2,5	**WP-3-LK40-G08-W3-K**
4350	1.57	.71	.45	2.68	2.40	.71	.91	1.50		.33	52.80			
300	40	18	11,5	68	61	22	23	38	3/4 (12)	8,5	22,8	3 x M8x25	24x2,5	**WP-3-LK40-G12-W3-K**
4350	1.57	.71	.45	2.68	2.40	.87	.91	1.50		.33	50.16			
300	51	25	13,5	84	75	22	27	47	3/4 (12)	10,5	49,8	3 x M10x30	32x2,5	**WP-3-LK51-G12-W3-K**
4350	2.01	.98	.53	3.31	2.95	.87	1.06	1.85		.41	109.56			
300	51	25	13,5	84	75	27	27	47	1 (16)	10,5	46,4	3 x M10x30	32x2,5	**WP-3-LK51-G16-W3-K**
4350	2.01	.98	.53	3.31	2.95	1.06	1.06	1.85		.41	102.08			
300	56	34	13,5	84	75	22	27	47	3/4 (12)	10,5	69,4	3 x M10x30	38x2,5	**WP-3-LK56-G12-W3-K**
4350	2.20	1.34	.53	3.31	2.95	.87	1.06	1.85		.41	152.68			
300	56	34	13,5	84	75	27	27	47	1 (16)	10,5	60,7	3 x M10x30	38x2,5	**WP-3-LK56-G16-W3-K**
4350	2.20	1.34	.53	3.31	2.95	1.06	1.06	1.85		.41	133.54			

[1] The maximum working pressure PN (bar/PSI) applies only to the flange itself. The actual maximum working pressure depends on the thickness and the quality of the tube used.

Materials / Ordering Options / Examples

* Kit with 3-Hole Flange made of Steel S355J2 or equivalent, zinc/nickel-plated including Metric bolts 10.9, spring rings, O-ring made of NBR (Buna-N®) **WP-3-LK...-G**-W3-K**

Please always indicate ØLK and Thread Size.

4-Hole 90° Flange with Female BSPP Thread
Type WP-LK-G

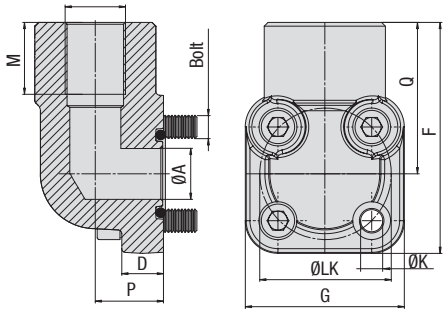

PN[1] (bar/PSI) 8.8	Dimensions (mm/in) ØLK	ØA	D	F	G	M	P	Q	T (BSPP)	ØK	Weight (kg/lbs) ca. per 100	Bolts Metric	O-ring	Ordering Codes
300	35	13,5	11	61	42	19	18	40	3/8 (06)	6,5	33,1	2 x M6x20	19x2,5	**WP-LK35-G06-W3-K**
4350	1.38	.53	.43	2.40	1.65	.75	.71	1.57		.26	72.82	2 x M6x35		
300	35	13,5	11	61	42	19	18	40	1/2 (08)	6,5	32,3	2 x M6x20	19x2,5	**WP-LK35-G08-W3-K**
4350	1.38	.53	.43	2.40	1.65	.75	.71	1.57		.26	71.06	2 x M6x35		
300	40	20	10	67,5	45	19	24	45	1/2 (08)	6,5	38,3	2 x M6x25	24x2,5	**WP-LK40-G08-W3-K**
4350	1.57	.79	.39	2.66	1.77	.75	.94	1.77		.26	84.26	2 x M6x45		
300	40	20	10	67,5	45	20	24	45	3/4 (12)	6,5	35,7	2 x M6x25	24x2,5	**WP-LK40-G12-W3-K**
4350	1.57	.79	.39	2.66	1.77	.79	.94	1.77		.26	78.49	2 x M6x45		
300	40	20	10	67,5	45	22	24	45	1 (16)	6,5	48,3	2 x M6x25	24x2,5	**WP-LK40-G16-W3-K**
4350	1.57	.79	.39	2.66	1.77	.87	.94	1.77		.26	106.26	2 x M6x55		
250	55	25	13	83,5	59	22	35	54	1 (16)	8,5	82,3	2 x M8x25	32x2,5	**WP-LK55-G16-W3-K**
3625	2.17	.98	.51	3.29	2.32	.87	1.38	2.13		.33	181.06	2 x M8x60		
250	55	25	13	83,5	59	25	35	54	1-1/4 (20)	8,5	107,2	2 x M8x25	32x2,5	**WP-LK55-G20-W3-K**
3625	2.17	.98	.51	3.29	2.32	.98	1.38	2.13		.33	235.84	2 x M8x70		

Materials / Ordering Options / Examples

* Kit with 4-Hole Flange made of Steel S355J2 or equivalent, zinc/nickel-plated including Metric bolts 10.9, spring rings, O-ring made of NBR (Buna-N®) **WP-LK...-G****-W3-K

Please always indicate ØLK and Thread Size.

[1] The maximum working pressure PN (bar/PSI) applies only to the flange itself. The actual maximum working pressure depends on the thickness and the quality of the tube used.

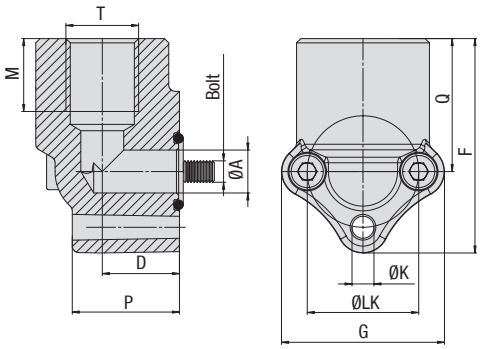

3-Hole 90° Flange with Female BSPP Thread (Aluminium) Type WP-3-LK-G-W50

PN[1] (bar/PSI) 8.8	Dimensions (mm/in) ØLK	ØA	D	F	G	M	P	Q	T (BSPP)	ØK	Weight (kg/lbs) ca. per 100	Bolts Metric	O-ring	Ordering Codes
180	26	10	25	50	38	17	18	31	3/8 (06)	6	9,1	3 x M5x35	14x1,78	**WP-3-LK26-G06-W50-K**
2610	1.02	.39	.98	1.97	1.50	.67	.71	1.22		.24	20.02			
180	26	10	25	50	38	18	18	31	1/2 (08)	6	8,6	3 x M5x35	14x1,78	**WP-3-LK26-G08-W50-K**
2610	1.02	.39	.98	1.97	1.50	.71	.71	1.22		.24	18.92			
180	30	12,5	26	53	40	17	18	31	3/8 (06)	7	12,0	3 x M6x35	15,88x2,62	**WP-3-LK30-G06-W50-K**
2610	1.18	.49	1.02	2.09	1.57	.67	.71	1.22		.28	26.40			
180	30	12,5	26	53	44	18	18	31	1/2 (08)	7	11,2	3 x M6x35	15,88x2,62	**WP-3-LK30-G08-W50-K**
2610	1.18	.49	1.02	2.09	1.73	.71	.71	1.22		.28	24.64			
180	40	18	31	68	56	18	21,5	40	1/2 (08)	9,5	24,0	3 x M8x45	21,89x2,62	**WP-3-LK40-G08-W50-K**
2610	1.57	.71	1.22	2.68	2.20	.71	.85	1.57		.37	52.80			
180	40	18	31	68	56	22	21,5	40	3/4 (12)	9,5	22,8	3 x M8x45	21,89x2,62	**WP-3-LK40-G12-W50-K**
2610	1.57	.71	1.22	2.68	2.20	.87	.85	1.57		.37	50.16			
180	51-56	24,5	42	85	78	22	26	46	3/4 (12)	11	49,8	3 x M10x60	29,74x2,62	**WP-3-LK51-G12-W50-K**
2610	2.01-2.20	.96	1.65	3.35	3.07	.87	1.02	1.81		.43	109.56			
180	51-56	24,5	42	85	78	27	26	46	1 (16)	11	46,4	3 x M10x60	29,74x2,62	**WP-3-LK51-G16-W50-K**
2610	2.01-2.20	.96	1.65	3.35	3.07	1.06	1.02	1.81		.43	102.08			

[1] The maximum working pressure PN (bar/PSI) applies only to the flange itself. The actual maximum working pressure depends on the thickness and the quality of the tube used.

Materials / Ordering Options / Examples

* Kit with 3-Hole Flange made of Aluminium [EN AC-Al Si9Cu(Fe)] including Metric bolts 10.9, spring rings, O-ring made of NBR (Buna-N®) **WP-3-LK...-G**-W50-K**

Please always indicate ØLK and Thread Size.

4-Hole 90° Flange with Female BSPP Thread (Aluminium)
Type WP-LK-G-W50

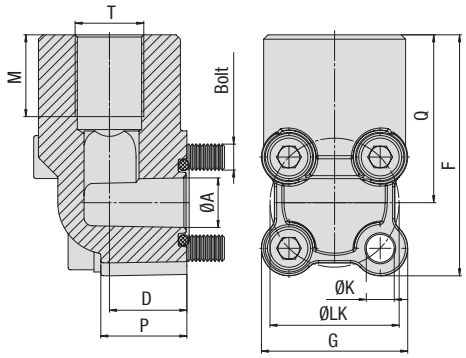

PN[1] (bar/PSI) 8.8	Dimensions (mm/in) ØLK	ØA	D	F	G	M	P	Q	T (BSPP)	ØK	Weight (kg/lbs) ca. per 100	Bolts Metric	O-ring	Ordering Codes
180	30	11,5	20	56	34	19	18	39	3/8 (06)	6,5	14,3	2 x M6x30	15,88x2,62	**WP-LK30-G06-W50-K**
2610	1.18	.45	.79	2.20	1.34	.75	.71	1.54		.26	31.46	2 x M6x40		
180	30	11,5	20	56	34	19	18	39	1/2 (08)	6,5	13,8	2 x M6x30	15,88x2,62	**WP-LK30-G08-W50-K**
2610	1.18	.45	.79	2.20	1.34	.75	.71	1.54		.26	30.36	2 x M6x40		
180	35	14	20	61,5	38	19	18	42,5	3/8 (06)	6,5	85,8	2 x M6x30	18,72x2,62	**WP-LK35-G06-W50-K**
2610	1.38	.55	.79	2.42	1.50	.75	.71	1.67		.26	188.76	2 x M6x40		
180	35	14	20	61,5	38	19	18	42,5	1/2 (08)	6,5	14,2	2 x M6x30	18,72x2,62	**WP-LK35-G08-W50-K**
2610	1.38	.55	.79	2.42	1.50	.75	.71	1.67		.26	31.24	2 x M6x40		
180	40	18	28	69	43	19	24	47,5	1/2 (08)	6,5	21,8	2 x M6x40	21,89x2,62	**WP-LK40-G08-W50-K**
2610	1.57	.71	1.10	2.72	1.69	.75	.94	1.87		.26	47.96	2 x M6x50		
180	40	18	28	69	43	20	24	47,5	3/4 (12)	6,5	22,0	2 x M6x40	21,89x2,62	**WP-LK40-G12-W50-K**
2610	1.57	.71	1.10	2.72	1.69	.79	.94	1.87		.26	48.40	2 x M6x50		
180	55	24,5	31	83	58	20	29	54	3/4 (12)	8,5	42,4	2 x M8x45	29,74x2,62	**WP-LK55-G12-W50-K**
2610	2.17	.96	1.22	3.27	2.28	.79	1.14	2.13		.33	93.28	2 x M8x60		
180	55	24,5	31	83	58	22	29	54	1 (16)	8,5	41,0	2 x M8x45	29,74x2,62	**WP-LK55-G16-W50-K**
2610	2.17	.96	1.22	3.27	2.28	.87	1.14	2.13		.33	90.20	2 x M8x60		

Materials / Ordering Options / Examples

* Kit with 4-Hole Flange made of Aluminium [EN AC-Al Si9Cu(Fe)] including Metric bolts 10.9, spring rings, O-ring made of NBR (Buna-N®) **WP-LK...-G**-W50-K**

Please always indicate ØLK and Thread Size.

[1] The maximum working pressure PN (bar/PSI) applies only to the flange itself. The actual maximum working pressure depends on the thickness and the quality of the tube used.

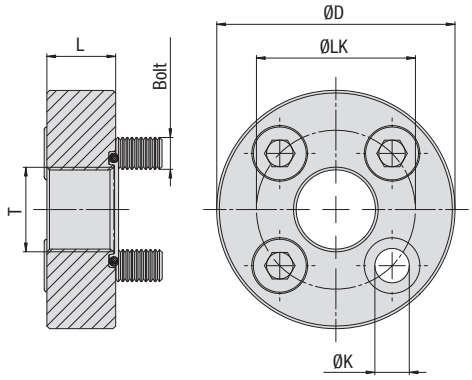

4-Hole Flange with Female BSPP Thread (Flat Style) Type GP-FL-LK-G

PN[1] (bar/PSI) 8.8	Dimensions (mm/in) ØLK	ØD	L	T (BSPP)	ØK	Weight (kg/lbs) ca. per 100	Bolts Metric	O-ring	Ordering Codes
250	30	45	13	3/8 (06)	6,5	14,3	M6x16	18,77x1,78	**GP-FL-LK30-G06-W129-K**
3625	1.18	1.77	.51		.26	31.46			
250	40	58	15	1/2 (08)	8,5	27,4	M8x20	25,12x1,78	**GP-FL-LK40-G08-W129-K**
3625	1.57	2.28	.59		.33	60.28			
250	51	75	18	3/4 (12)	10,5	55,3	M10x25	31,42x2,62	**GP-FL-LK51-G12-W129-K**
3625	2.01	2.95	.71		.41	121.66			
250	56	75	18	3/4 (12)	10,5	55,4	M10x25	31,42x2,62	**GP-FL-LK56-G12-W129-K**
3625	2.20	2.95	.71		.41	121.88			
180	62	88	20	1 (16)	10,5	82,0	M10x25	39,69x3,53	**GP-FL-LK62-G16-W129-K**
2610	2.44	3.46	.79		.41	180.40			
180	62	88	20	1 (16)	12,5	81,5	M12x25	39,69x3,53	**GP-FL-LK62-G16-M12-W129-K**
2610	2.44	3.46	.79		.49	179.30			
180	72,5	98	22	1-1/4 (20)	12,5	106,6	M12x30	47,22x3,53	**GP-FL-LK72.5-G20-W129-K**
2610	2.85	3.86	.87		.49	234.52			

[1] The maximum working pressure PN (bar/PSI) applies only to the flange itself. The actual maximum working pressure depends on the thickness and the quality of the tube used.

Materials / Ordering Options / Examples

* Kit with 4-Hole Flange made of Steel S355J2 or equivalent, zinc-plated and thick-film-passivated **GP-LK...-G**-W129-K** including Metric bolts 10.9, O-ring made of NBR (Buna-N®)

Please always indicate ØLK and Thread Size.

4-Hole Butt-Weld Flange
Type GP-LK-ST

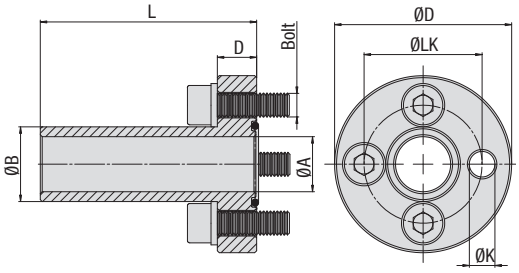

PN[1] (bar/PSI) 8.8	Dimensions (mm/in) ØLK	ØA	ØB	D	ØD	L	ØK	Weight (kg/lbs) ca. per 100	Bolts Metric	O-ring	Ordering Codes
250	30	14	19	10	45	55	6,5	17,9	M6x20	18,77x1,78	**GP-LK30-ST-19/14-W1-K**
3625	1.18	.55	.75	.39	1.77	2.17	.26	39.38			
250	40	19	25,4	12	58	60	8,5	34,9	M8x25	25,12x1,78	**GP-LK40-ST-25.4/19-W1-K**
3625	1.57	.75	1.00	.47	2.28	2.36	.33	76.78			
250	51	24,5	32	16	76	72	10,5	74,4	M10x35	31,42x2,62	**GP-LK51-ST-32/24.5-W1-K**
3625	2.01	.96	1.26	.63	2.99	2.83	.41	163.68			
250	56	24,5	32	16	76	72	10,5	74,2	M10x35	31,42x2,62	**GP-LK56-ST-32/24.5-W1-K**
3625	2.20	.96	1.26	.63	2.99	2.83	.41	163.24			

F

Materials / Ordering Options / Examples

* Kit with 4-Hole Flange made of Steel S355J2 or equivalent, blank (oiled) including Metric bolts 10.9, spring rings, O-ring made of NBR (Buna-N®) **GP-LK...-ST-**/**-W1-K**

Please always indicate ØLK, ØB and ØA.

[1] The maximum working pressure PN (bar/PSI) applies only to the flange itself. The actual maximum working pressure depends on the thickness and the quality of the tube used.

4-Hole Flange with Male BSPP Thread and 60° Conical Bore (acc. to BS 5200) Type GP-LK-B

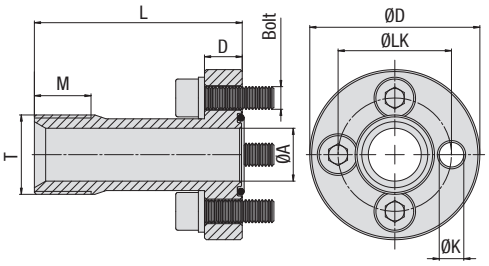

PN[1] (bar/PSI) 8.8	Dimensions (mm/in) ØLK	ØA	D	ØD	L	M	T (BSPP)	ØK	Weight (kg/lbs) ca. per 100	Bolts Metric	O-ring	Ordering Codes
250	30	14	10	45	55	15	1/2 (08)	6,5	17,1	M6x20	18,77x1,78	**GP-LK30-B08-W129-K**
3625	1.18	.55	.39	1.77	2.17	.59		.26	37.62			
250	40	19	12	58	60	16	3/4 (12)	8,5	33,8	M8x25	25,12x1,78	**GP-LK40-B12-W129-K**
3625	1.57	.75	.47	2.28	2.36	.63		.33	74.36			
250	51	24	16	76	72	19	1 (16)	10,5	71,3	M10x35	31,42x2,62	**GP-LK51-B16-W129-K**
3625	2.01	.94	.63	2.99	2.83	.75		.41	156.86			
250	56	24	16	76	72	19	1 (16)	10,5	71,5	M10x35	31,42x2,62	**GP-LK56-B16-W129-K**
3625	2.20	.94	.63	2.99	2.83	.75		.41	157.30			

F

[1] The maximum working pressure PN (bar/PSI) applies only to the flange itself. The actual maximum working pressure depends on the thickness and the quality of the tube used.

Materials / Ordering Options / Examples

* Kit with 4-Hole Flange made of Steel S355J2 or equivalent, zinc-plated and thick-film-passivated **GP-LK...-B**-W129-K including Metric bolts 10.9, spring rings, O-ring made of NBR (Buna-N®)

Please always indicate ØLK and Thread Size.

4-Hole Flange with Female BSPP Thread
Type GP-LK-G

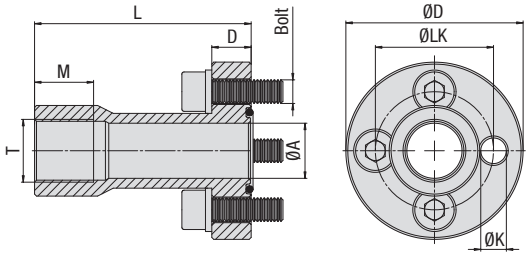

PN[1] (bar/PSI) 8.8	Dimensions (mm/in) ØLK	ØA	D	ØD	L	M	T (BSPP)	ØK	Weight (kg/lbs) ca. per 100	Bolts Metric	O-ring	Ordering Codes
250	30	14	10	45	55	15	3/8 (06)	6,5	18,7	M6x20	18,77x1,78	**GP-LK30-G06-W129-K**
3625	1.18	.55	.39	1.77	2.17	.59		.26	41.14			
250	40	19	12	58	60	16	1/2 (08)	8,5	35,4	M8x25	25,12x1,78	**GP-LK40-G08-W129-K**
3625	1.57	.75	.47	2.28	2.36	.63		.33	77.88			
250	51	24,5	16	76	72	19	3/4 (12)	10,5	74,1	M10x35	31,42x2,62	**GP-LK51-G12-W129-K**
3625	2.01	.96	.63	2.99	2.83	.75		.41	163.02			
250	56	24,5	16	76	72	19	3/4 (12)	10,5	74,3	M10x35	31,42x2,62	**GP-LK56-G12-W129-K**
3625	2.20	.96	.63	2.99	2.83	.75		.41	163.46			

F

Materials / Ordering Options / Examples

* Kit with 4-Hole Flange made of Steel S355J2 or equivalent, zinc-plated and thick-film-passivated **GP-LK...-G**-W129-K** including Metric bolts 10.9, spring rings, O-ring made of NBR (Buna-N®)

Please always indicate ØLK and Thread Size.

[1] The maximum working pressure PN (bar/PSI) applies only to the flange itself. The actual maximum working pressure depends on the thickness and the quality of the tube used.

Assembly Instructions for SAE Flanges	114
Property Classes of Bolts	115
Tightening Torques	115
Sizing Guide for SAE Flanges	116

G

Assembly Instructions for SAE Flanges

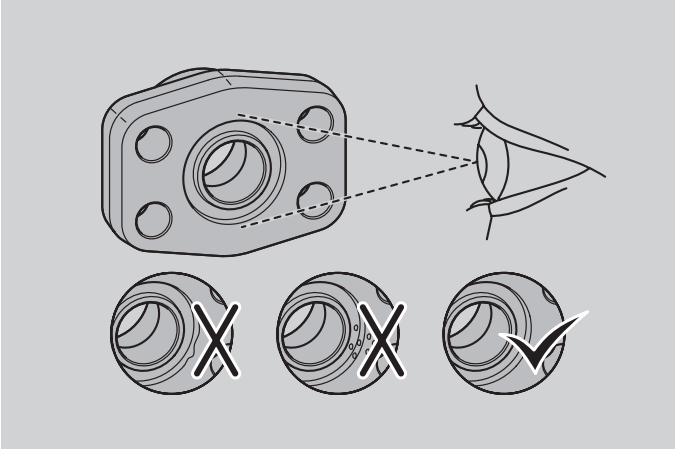

Check the sealing surface and the o-ring groove of the flange for visible damage (scratches, cracks, notches, sharp edges or burrs) and make sure that both are free of contamination and any foreign particles. Circular machining marks up to a surface roughness of Ra max 3,2 (ISO 1302) are acceptable and do not influence the performance of the flange connection.

Scratches with a width greater than 0,13 mm (.0005 in) running perpendicular, radial, or spiral on the sealing surface or in the o-ring groove are not acceptable.

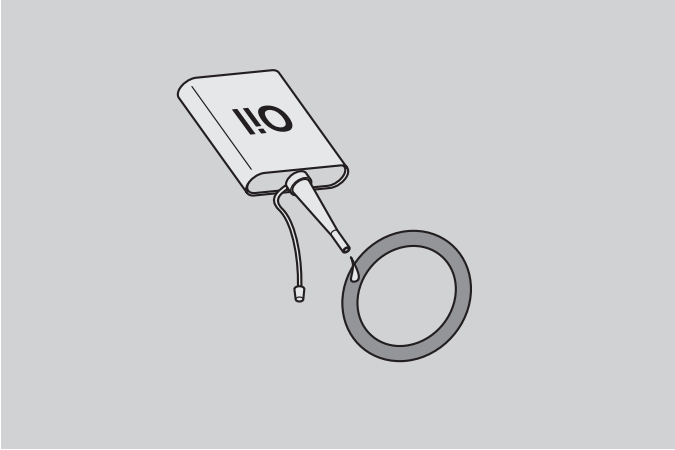

Lubricate the o-ring using the system fluid (or a compatible lubricant) and immediately proceed with the assembly in order to avoid exposure to contamination.

Do not use lubricating grease!

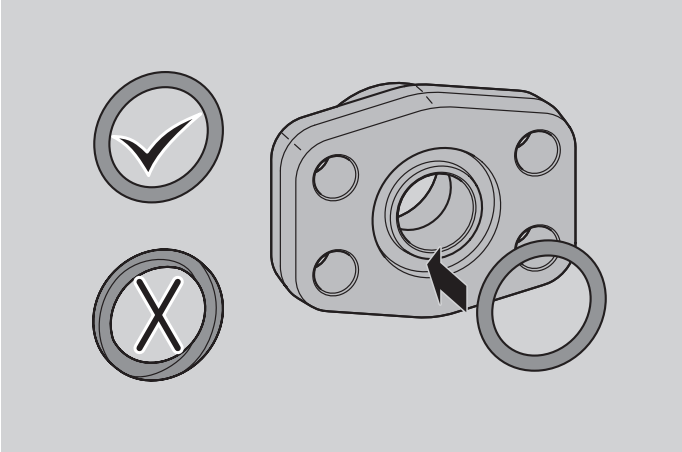

Place the o-ring into the o-ring groove, making sure that it is not twisted.

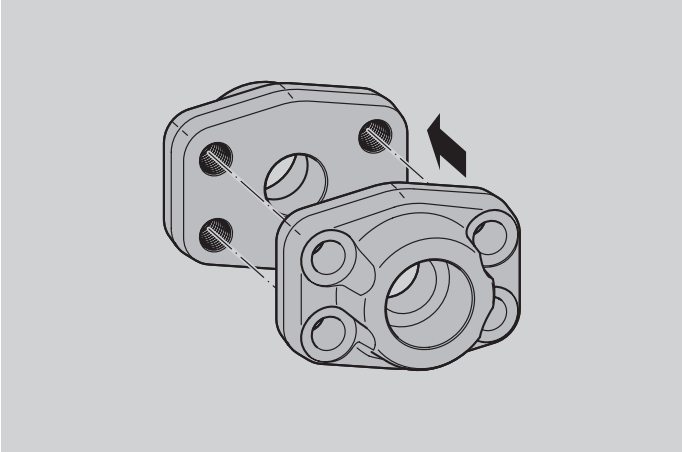

Position the flange against the mating component.

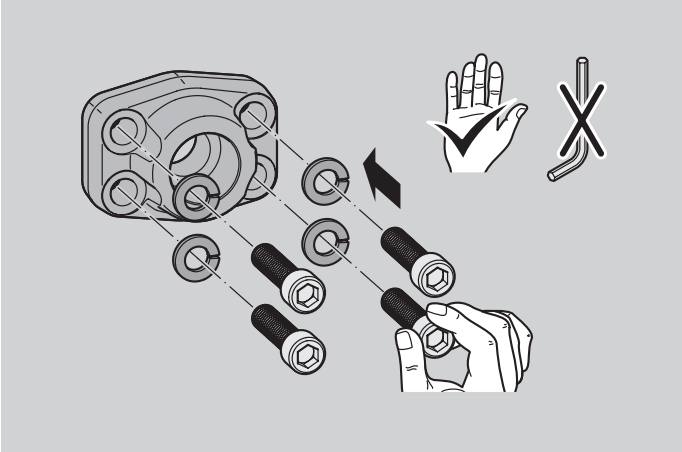

Place the socket head screws (with spring washers) into the flange and hand-tighten.

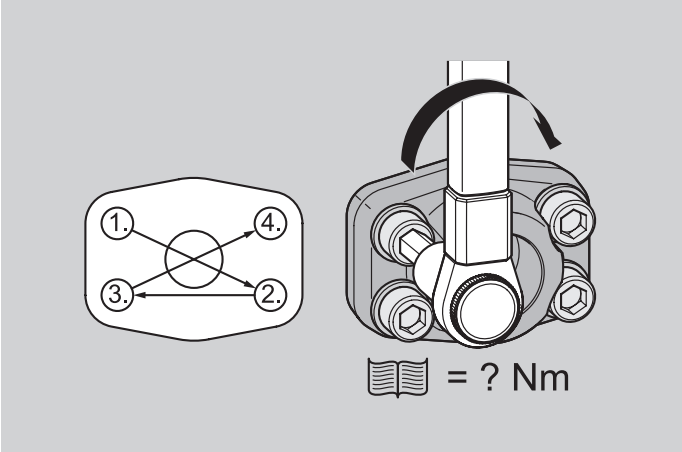

Finish the assembly by gradually tightening the socket head screws in small increments and in the displayed sequence to the appropriate torque level (see table on the right).

Property Classes of Bolts and Tightening Torques

Bolts 10.9 M (Metric Standard)

3000 PSI Standard Pressure Series (according to ISO 6162-1:2012)

Nominal Size		Bolt Size	Tightening Torques +10%		Working Pressure max		Burst Pressure min	
ISO	SAE		(Nm)	(ft·lb)	(bar)	(PSI)	(bar)	(PSI)
13	1/2	M8	32	23.7	350	5075	1400	20300
19	3/4	M10	70	51.8	350	5075	1400	20300
25	1	M10	70	51.8	320	4641	1260	18270
32	1-1/4	M10	70	51.8	280	4061	1000	14500
38	1-1/2	M12	130	96.2	210	3045	800	11600
51	2	M12	130	96.2	210	3045	800	11600
64	2-1/2	M12	130	96.2	175	2538	640	9280
76	3	M16	295	218.3	160	2320	640	9280
89	3-1/2	M16	295	218.3	35	508	140	2030
102	4	M16	295	218.3	35	508	140	2030
127	5	M16	295	218.3	35	508	140	2030

6000 PSI High Pressure Series (according to ISO 6162-2:2012)

Nominal Size		Bolt Size	Tightening Torques +10%		Working Pressure max		Burst Pressure min	
ISO	SAE		(Nm)	(ft·lb)	(bar)	(PSI)	(bar)	(PSI)
13	1/2	M8	32	23.7	420	6090	1680	24366
19	3/4	M10	70	51.8	420	6090	1680	24366
25	1	M12	130	96.2	420	6090	1680	24366
32	1-1/4	M12	130	96.2	420	6090	1680	24366
32	1-1/4	M14 [1]	180	133.2	420	6090	1680	24366
38	1-1/2	M16	295	218.3	420	6090	1680	24366
51	2	M20	550	407.0	420	6090	1680	24366
64	2-1/2	M24	550	407.0	420	6090	1680	24366
76	3	M30	650	479.4	420	6090	1680	24366

Bolts 8.8 old Norm Standard

3000 PSI Standard Pressure Series (according to ISO 6162-1:2002)

Nominal Size		Bolt Size	Tightening Torques +10%		Working Pressure max		Burst Pressure min	
ISO	SAE		(Nm)	(ft·lb)	(bar)	(PSI)	(bar)	(PSI)
13	1/2	M8	24	17.8	350	5075	1400	20300
19	3/4	M10	50	37.0	350	5075	1400	20300
25	1	M10	50	37.0	250	3625	1000	14500
32	1-1/4	M10	50	37.0	200	2900	800	11600
38	1-1/2	M12	92	68.1	200	2900	800	11600
51	2	M12	92	68.1	160	2320	640	9280
64	2-1/2	M12	92	68.1	100	1450	400	5800
76	3	M16	210	155.4	100	1450	400	5800
89	3-1/2	M16	210	155.4	35	508	140	2030
102	4	M16	210	155.4	35	508	140	2030
127	5	M16	210	155.4	35	508	140	2030

6000 PSI High Pressure Series (according to ISO 6162-2:2002)

Nominal Size		Bolt Size	Tightening Torques +10%		Working Pressure max		Burst Pressure min	
ISO	SAE		(Nm)	(ft·lb)	(bar)	(PSI)	(bar)	(PSI)
13	1/2	M8	24	17.8	350	5075	1400	20300
19	3/4	M10	50	37.0	350	5075	1400	20300
25	1	M12	92	68.1	350	5075	1400	20300
32	1-1/4	M12	92	68.1	350	5075	1400	20300
32	1-1/4	M14 [1]	130	96.2	350	5075	1400	20300
38	1-1/2	M16	210	155.4	350	5075	1400	20300
51	2	M20	400	296.0	350	5075	1400	20300

Bolts Gr8 U (UNC)

3000 PSI Standard Pressure Series (according to ISO 6162-1:2012)

Nominal Size		Bolt Size	Tightening Torques +10%		Working Pressure max		Burst Pressure min	
ISO	SAE		(Nm)	(ft·lb)	(bar)	(PSI)	(bar)	(PSI)
13	1/2	5/16-18 UNC	32	23,7	350	5075	1400	20300
19	3/4	3/8-16 UNC	60	44,4	350	5075	1400	20300
25	1	3/8-16 UNC	60	44,4	320	4641	1260	18270
32	1-1/4	7/16-14 UNC	92	68,1	280	4061	1000	14500
38	1-1/2	1/2-13 UNC	150	111,0	210	3045	800	11600
51	2	1/2-13 UNC	150	111,0	210	3045	800	11600
64	2-1/2	1/2-13 UNC	150	111,0	175	2538	640	9280
76	3	5/8-11 UNC	295	218,3	160	2320	640	9280
89	3-1/2	5/8-11 UNC	295	218,3	35	508	140	2030
102	4	5/8-11 UNC	295	218,3	35	508	140	2030
127	5	5/8-11 UNC	295	218,3	35	508	140	2030

6000 PSI High Pressure Series (according to ISO 6162-2:2012)

Nominal Size		Bolt Size	Tightening Torques +10%		Working Pressure max		Burst Pressure min	
ISO	SAE		(Nm)	(ft·lb)	(bar)	(PSI)	(bar)	(PSI)
13	1/2	5/16-18 UNC	32	23.7	420	6090	1680	24366
19	3/4	3/8-16 UNC	60	44.4	420	6090	1680	24366
25	1	7/16-14 UNC	92	68.1	420	6090	1680	24366
32	1-1/4	1/2-13 UNC	150	111.0	420	6090	1680	24366
38	1-1/2	5/8-11 UNC	295	218.3	420	6090	1680	24366
51	2	3/4-10 UNC	450	333.0	420	6090	1680	24366

Notes

[1] Not to be used for new designs.

Attention:
All bolts have to be pre-tightened before applying the full tightening torque to the bolts. Otherwise, the flange may break.

Please note that the tightening torques as stated on this page are only recommendations. These values correspond to oiled bolts with a friction coefficient of 0.17 and the material combination Steel/Steel.

The exact tightening torques depend on factors like material, finishing, coating and lubrication of the components used, and have to be determined by the user himself.

Please contact STAUFF prior to the assembly for torque recommendations for alternative mating materials.

Sizing Guide for SAE Flanges
3000 PSI Standard Pressure Series

Nominal Size SAE	Dimensions (mm/in) H	I	ØK	Metric Threads
1/2	17,5	38,1	8,7	M8
	.69	1,50	.34	
3/4	22,3	47,6	1.5	M10
	.88	1,87	.41	
1	26,2	52,4	1.5	M10
	1,03	2,06	.41	
1-1/4	3.2	58,7	1.5 / 12,5	M10 / M12
	1,19	2,31	.41 / .49	
1-1/2	35,7	69,9	13,5 / 14,5	M12 / M14
	1,41	2,75	.53 / .57	
2	42,9	77,8	13,5 / 14,5	M12 / M14
	1,69	3,06	.53 / .57	
2-1/2	5.8	88,9	13,5 / 14,5	M12 / M14
	2,00	3,50	.53 / .57	
3	61,9	106,4	17	M16
	2,44	4,19	.67	
3-1/2	69,9	12.7	17	M16
	2,75	4,75	.67	
4	77,8	13.2	17	M16
	3,06	5,13	.67	
5	92,1	152,4	17	M16
	3,63	6,00	.67	

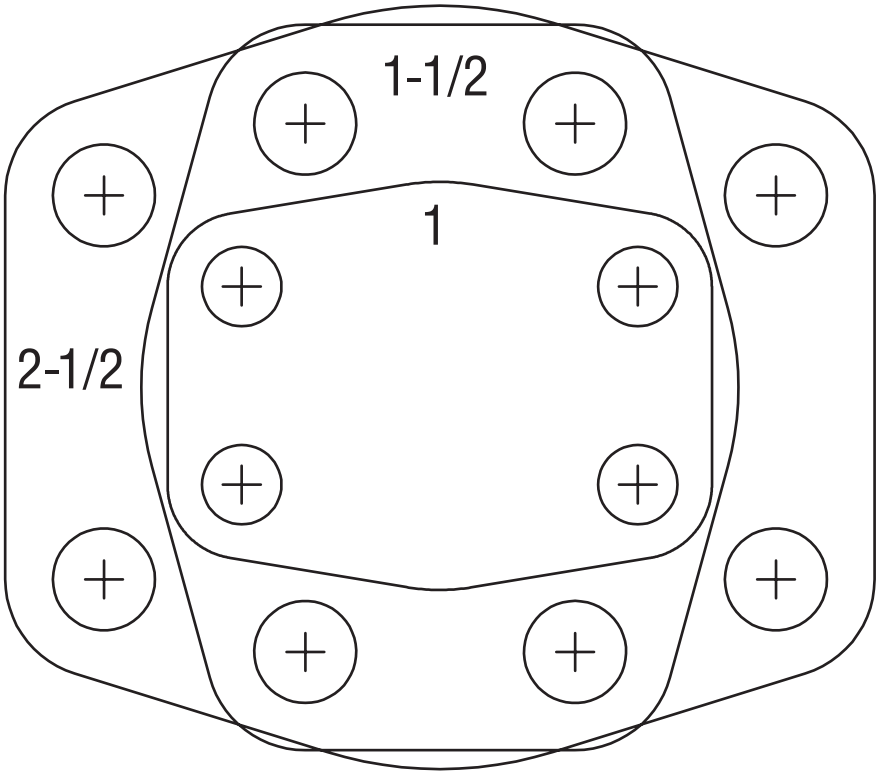

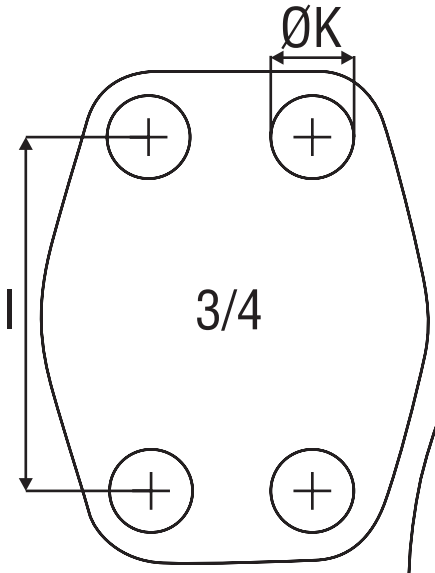

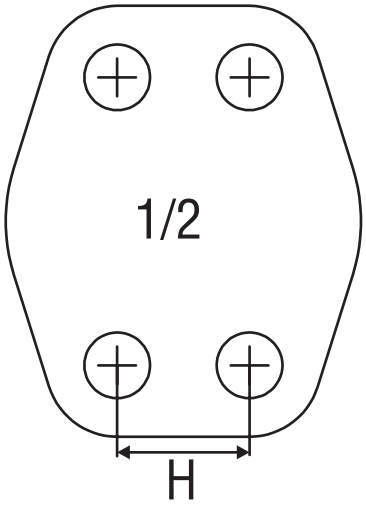

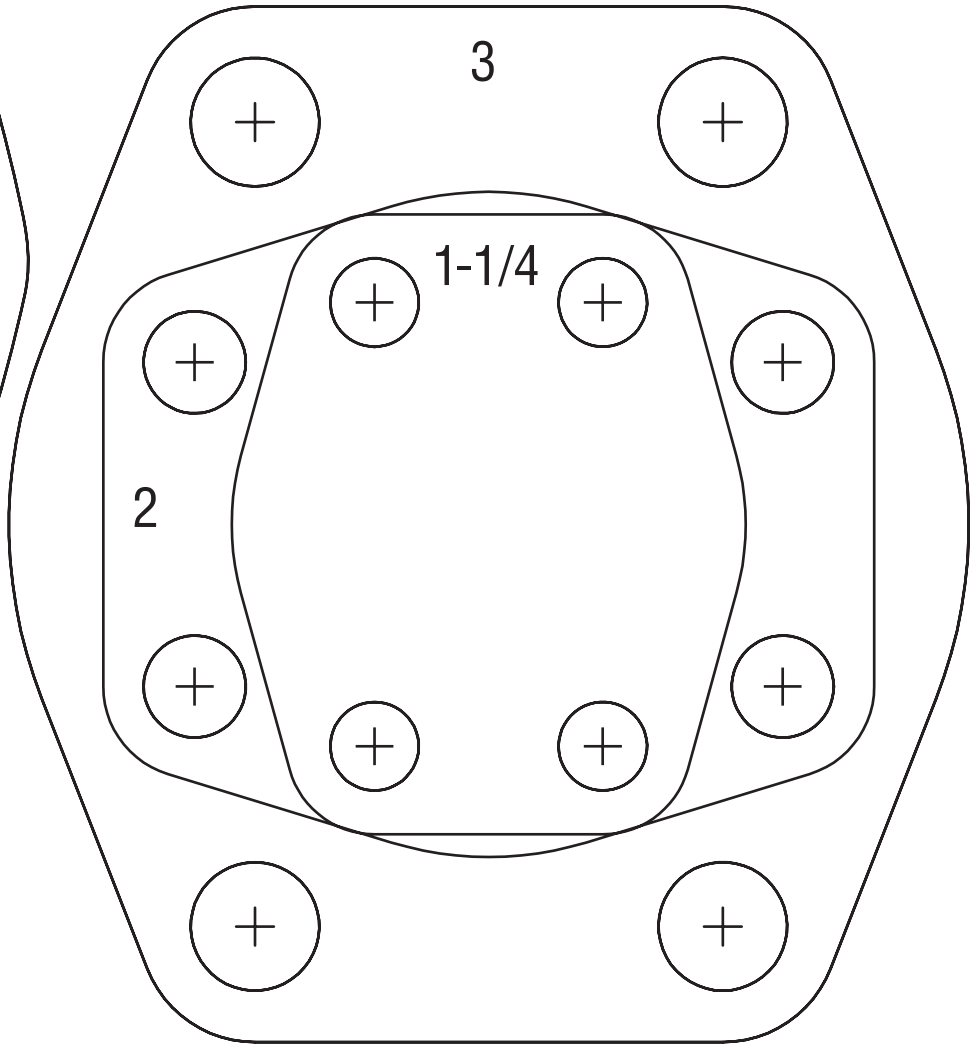

G

Sizing Guide for SAE Flanges
6000 PSI High Pressure Series

Nominal Size SAE	Dimensions (mm/in) H	I	ØK	Metric Threads
1/2	18,2	40,5	8,7	M8
	.72	1.59	.34	
3/4	23,8	50,8	10,5	M10
	.94	2.00	.41	
1	27,8	57,2	13	M12
	1.09	2.25	.51	
1-1/4	31,8	66,6	13,5 / 15,0	M12 / M14
	1.25	2.62	.53 / .59	
1-1/2	36,5	79,3	17	M16
	1.44	3.12	.67	
2	44,5	96,8	21	M20
	1.75	3.81	.83	

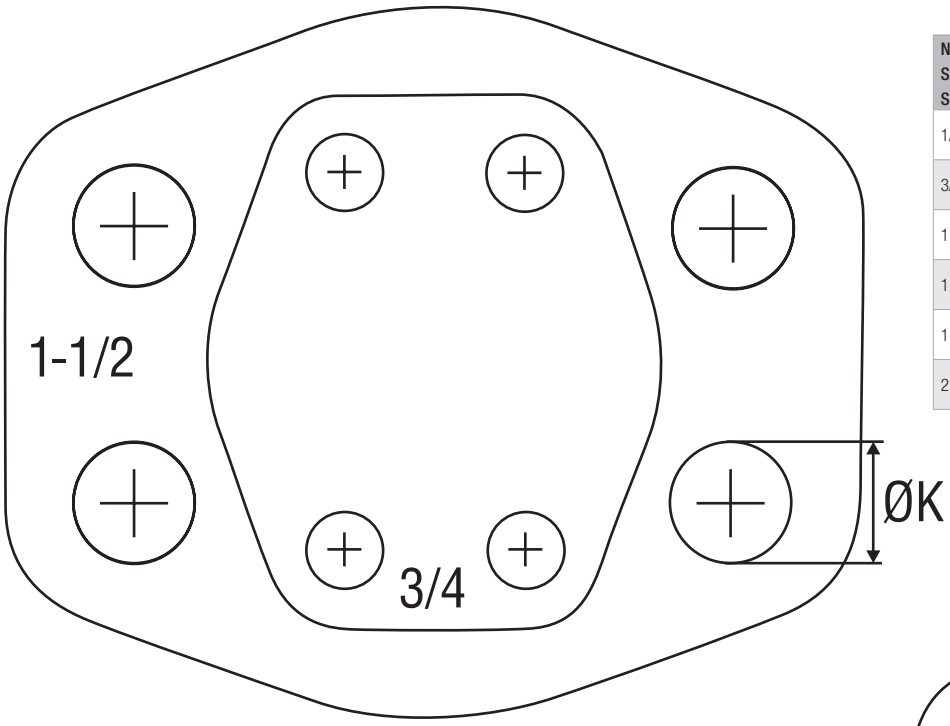

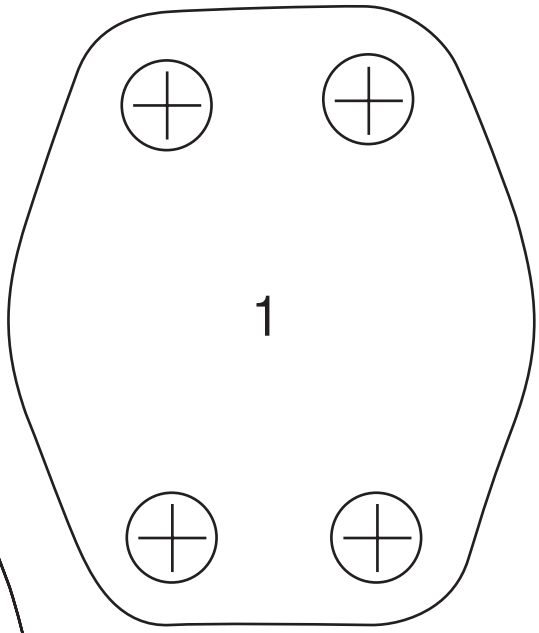

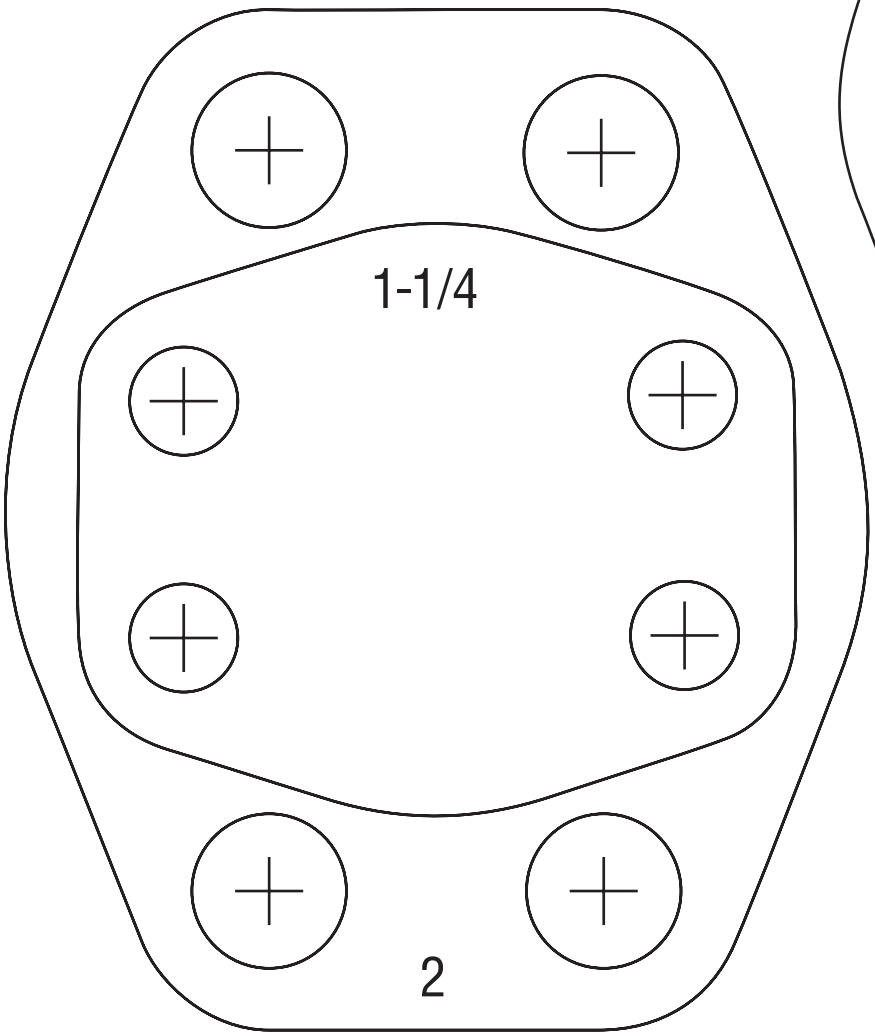

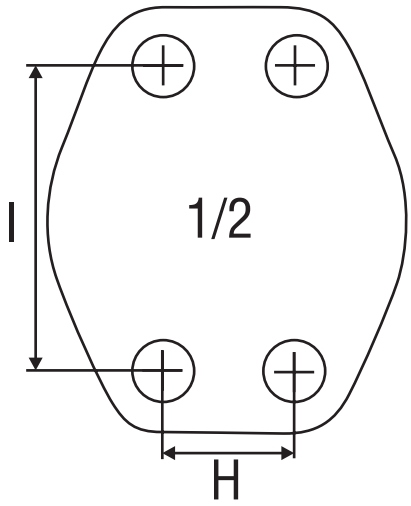

G

Product-Specific Abbreviations 120

Global Contact Directory 122

Product-Specific Abbreviations

Abbreviation	Product Category	Product Description	Page
BAS-CP	Accessories for SAE Flanges	SAE Single-Part Blanking Counterflange	83
BAS-ES	SAE Flange / Counterflange Adaptors	SAE Single-Part Socket-Weld Counterflange	62
BAS-FL-ES	SAE Flange / Counterflange Adaptors	SAE Single-Part Socket-Weld Counterflange (Flat Style)	65
BAS-G	SAE Flange / Counterflange Adaptors	SAE Single-Part Counterflange with Female BSPP Thread	42
BAS-N	SAE Flange / Counterflange Adaptors	SAE Single-Part Counterflange with Female NPT Thread	46
BAS-SRE	SAE Flange / Counterflange Adaptors	SAE Single-Part Butt-Weld Counterflange for Metric Tubes	58
BAS-ST	SAE Flange / Counterflange Adaptors	SAE Single-Part Butt-Weld Counterflange for High Pressure Tubes	52
BAS-STRE	SAE Flange / Counterflange Adaptors	SAE Single-Part Butt-Weld Counterflange for Low Pressure Tubes	55
BC-L	SAE Flange Blocks	SAE Block L-Connection (Connector Style)	95
BC-T	SAE Flange Blocks	SAE Block T-Connection (Connector Style)	93
BF-L	SAE Flange Blocks	SAE Block L-Connection (Adaptor Style)	94
BF-L	SAE Flange Blocks	SAE Block L-Connection Reduction (Adaptor Style)	96
BF-T	SAE Flange Blocks	SAE Block T-Connection (Adaptor Style)	92
BFX90-ES	SAE Flange / Counterflange Adaptors	SAE 90° Single-Part Socket-Weld Flange	76
BFX90-G	SAE Flange / Counterflange Adaptors	SAE 90° Single-Part Flange with Female BSPP Thread	71
BFX90-L/S	SAE Flange / Counterflange Adaptors	SAE 90° Single-Part Flange with Male Metric Thread and 24° Conical Bore (Shape W acc. to DIN 3861)	78
BFX90-N	SAE Flange / Counterflange Adaptors	SAE 90° Single-Part Flange with Female NPT Thread	72
BFX90-SRE	SAE Flange / Counterflange Adaptors	SAE 90° Single-Part Butt-Weld Flange for Metric Tubes	74
BFX90-STC	SAE Flange / Counterflange Adaptors	SAE 90° Single-Part Butt-Weld Flange for High Pressure Tubes	73
BFX-B	SAE Flange / Counterflange Adaptors	SAE Single-Part Flange with Male BSPP Thread and 60° Conical Bore (acc. to BS 5200)	68
BFX-BAS	Accessories for SAE Flanges	SAE Reducing Flange	88
BFX-CP	Accessories for SAE Flanges	SAE Single-Part Blanking Flange	82
BFX-ES	SAE Flange / Counterflange Adaptors	SAE Single-Part Socket-Weld Flange	60
BFX-FL-ES	SAE Flange / Counterflange Adaptors	SAE Single-Part Socket-Weld Flange (Flat Style)	64
BFX-G	SAE Flange / Counterflange Adaptors	SAE Single-Part Flange with Female BSPP Thread	40
BFX-J	SAE Flange / Counterflange Adaptors	SAE Single-Part Flange with Male UN/UNF Thread and 37° JIC Taper (acc. to ISO 8434-2 / SAE J514)	70
BFX-L/S	SAE Flange / Counterflange Adaptors	SAE Single-Part Flange with Male Metric Thread and 24° Conical Bore (Shape W acc. to DIN 3861)	66
BFX-N	SAE Flange / Counterflange Adaptors	SAE Single-Part Flange with Female NPT Thread	44
BFX-SRE	SAE Flange / Counterflange Adaptors	SAE Single-Part Butt-Weld Flange for Metric Tubes	56
BFX-ST	SAE Flange / Counterflange Adaptors	SAE Single-Part Butt-Weld Flange for High Pressure Tubes	50
BFX-STRE	SAE Flange / Counterflange Adaptors	SAE Single-Part Butt-Weld Flange for Low Pressure Tubes	54
BFX-U	SAE Flange / Counterflange Adaptors	SAE Single-Part Flange with Female UN/UNF Thread	48
BM	SAE Split Flange Halves / Flange Clamps	SAE Flange Clamp	16
BM-FL	SAE Split Flange Halves / Flange Clamps	SAE Flange Clamp (Flat Style)	19
BM-G	SAE Split Flange Halves / Flange Clamps	SAE Flange Clamp with Metric Tapped Holes	20
CAG90-L/S	SAE Single-Part Flanges / Counterflanges	SAE 90° Flange Adaptor with Male Metric Thread and 24° Conical Bore (Shape W acc. to DIN 3861)	36
CAG90-ST	SAE Single-Part Flanges / Counterflanges	SAE 90° Butt-Weld Flange Adaptor	34
CAG-BP	Accessories for SAE Flanges	SAE Blindplug (Standard)	85
CAG-BPH	Accessories for SAE Flanges	SAE Blindplug (High)	85
CAG-ES	SAE Single-Part Flanges / Counterflanges	SAE Socket-Weld Flange Adaptor	26
CAG-L/S	SAE Single-Part Flanges / Counterflanges	SAE Flange Adaptor with Male Metric Thread and 24° Conical Bore (Shape W acc. to DIN 3861)	32
CAG-N	SAE Single-Part Flanges / Counterflanges	SAE Flange Adaptor with Male NPT Thread	30
CAG-ST	SAE Single-Part Flanges / Counterflanges	SAE Butt-Weld Flange Adaptor	24
CAG-T	SAE Single-Part Flanges / Counterflanges	SAE Flange Adaptor with Male BSPT Thread	28
CPL	Accessories for SAE Flanges	SAE Cover Plate	87
CSG-ES	SAE Single-Part Flanges / Counterflanges	SAE Socket-Weld Counterflange Adaptor	26
CSG-N	SAE Single-Part Flanges / Counterflanges	SAE Counterflange Adaptor with Male NPT Thread	30
CSG-ST	SAE Single-Part Flanges / Counterflanges	SAE Butt-Weld Counterflange Adaptor	24
CSG-T	SAE Single-Part Flanges / Counterflanges	SAE Counterflange Adaptor with Male BSPT Thread	28
DB	SAE Split Flange Halves / Flange Clamps	SAE Split Flange Halves	14
DB-FL	SAE Split Flange Halves / Flange Clamps	SAE Split Flange Halves (Flat Style)	18
GP-FL-LK-G	Gear Pump Flanges	4-Hole Flange with Female BSPP Thread (Flat Style)	107
GP-LK-B	Gear Pump Flanges	4-Hole Flange with Male BSPP Thread and 60° Conical Bore (acc. to BS 5200)	109
GP-LK-G	Gear Pump Flanges	4-Hole Flange with Female BSPP Thread	110
GP-LK-L/S	Gear Pump Flanges	4-Hole Flange with Male Metric Thread and 24° Conical Bore (Shape W acc. to DIN 3861)	100
GP-LK-ST	Gear Pump Flanges	4-Hole Butt-Weld Flange	108
IS	Accessories for SAE Flanges	Socket Cap Bolt	89
KIT-BFX-IS	Accessories for SAE Flanges	Bolt Set	89
O-RING	Accessories for SAE Flanges	O-Ring	89
SPL	Accessories for SAE Flanges	SAE Sandwich Plate	86
SPL-G04-L	Accessories for SAE Flanges	SAE Sandwich Plate with Female BSPP Port	84
WP-3-LK-G	Gear Pump Flanges	3-Hole 90° Flange with Female BSPP Thread	103
WP-3-LK-G-W50	Gear Pump Flanges	3-Hole 90° Flange with Female BSPP Thread (Aluminium)	105
WP-3-LK-L/S	Gear Pump Flanges	4-Hole 90° Flange with Male Metric Thread and 24° Conical Bore (Shape W acc. to DIN 3861)	101
WP-3-LK-L/S	Gear Pump Flanges	3-Hole 90° Flange with Male Metric Thread and 24° Conical Bore (Shape W acc. to DIN 3861)	102
WP-LK-G	Gear Pump Flanges	4-Hole 90° Flange with Female BSPP Thread	104
WP-LK-G-W50	Gear Pump Flanges	4-Hole 90° Flange with Female BSPP Thread (Aluminium)	106